ENGINEERING MANUAL

Information is included relevant to the following Euro-MERiDIAN systems, fitted with End Station software issues 3.0 or later, or equivalent MSX cards:

Euro-10
Euro-12
Euro-22
Euro-28
Euro-44 +
Euro-134 *
Euro-256 *

* - Euro-44 + fitted with MSX Card.

This manual does NOT include information for earlier issues where this differs.

Bona fide alarm engineers may obtain technical support for this product from Castle Care-Tech Ltd. on 01344 886767

Euro-MERiDIAN

ENGINEERING MANUAL - CONTENTS

This manual provides the information necessary to successfully design, install and programme an alarm system built around an alarm control from the Euro-MERiDIAN range.

Quick Search
Euro-MERiDIAN – Menu Structure

This chapter summarises the menu structure of the Euro-MERiDIAN.

NOTE: Each of these menus is discussed in detail in the text of this manual in a logical order. This summary is presented in the order in which they actually appear.

Main Menu	Sub Menu	Function	Ref
a) MANAGER MENU			Please see User Manual for more information on each option
SET DATE & TIME?		Set / adjust time and date for display and system logs	
OMIT ZONES?		Temporarily omission of 24-hour zones whilst system is UNSET.	
CHANGE CODES?		Program and change USER and MANAGER codes / tags. Also authorisation of tags for Ward / Access Control purposes	
REVIEW LOGS?	User Log?	Review entries in USER log - set / unset, alarm events, etc.	
	Access Log?	Review entries in Access Control log (if facility used)	
WALK TEST?		Enable detector operation to be checked	
SIREN TEST?		Enable system Siren AND Strobe to be tested	
TEST CHC COMMUNICATIONS?		Initiate test call to Castle Host Computer (CHC) if SMS messages in use.	
ENGINEER MENU?		Permit entry to Engineer menu (NOTE Engineer code is required)	
EXIT MANAGER MENU?		can also be performed by use of A key.	

Main Menu	Sub Menu	Function	Ref
b) ENGINEER MENU			
CLEAN START?		Revert all programming to factory defaults. Does NOT clear system logs.	13-1
SOFTWARE REVISION?		Identifies model and software version number. ALSO software serial number, essential for reference if SMS messages used.	13-4
CHOOSE MODE?		Selection of EoL / iD mode. Also whether EoL zones are wired single or double resistor.	13-5
INSTALL ZEMS?		Programs presence of ZEMs into system so that zones can be programmed, etc.	13-6
CHANGE ZONES?		Programming of zones for correct detector functionality	13-12
ASSIGN KEYPADS / READERS?		Selection of which set points are used and what type (ie Keypads, Tag Readers, Access Control, Ward control, etc.) Also selects allocation of set points to areas on system.	13-13
SYSTEM DISPLAYS?		Permits display text to be modified for 'sign-on message' and for part-setting display messages. Also permits tailoring of information displayed.	13-15

Main Menu	Sub Menu	Function	Ref
CHANGE TIMERS?		Programming of all system timers (except Soak Test)	13-17,18
SET DATE AND TIME?		Set / adjust time and date for display and system logs	13-19
EXIT MODES?		Selection of means of completion of setting system, per area.	13-19
CHANGE CODES?		Program and change ENGINEER, MASTER MANAGER codes, also DURESS and GUARD codes. Does NOT permit programming of USER or MANAGER codes.	13-22
VOLUME CONTROL?		Allocation of volume level (for system loudspeaker output) for the various tones available.	13-23
ALARM RESPONSE?		Programming of alarm response for each area individually. Includes "upgrade" options, also response requirements for use with 'Confirmation' signalling	13-25
CHANGE OUTPUTS?		Programming of ALL system outputs	13-31

Main Menu	Sub Menu	Function	Ref
INTELLIGENT SET?		Selection of intelligent setting and programming of associated 'intelligent' zone.	13-34
SITE OPTIONS?		selection of range of miscellaneous options	13-35
ENGINEER RESET OPTIONS?		Selection of Engineer Reset (including Remote Reset code use) for the system.	13-37
REVIEW LOGS?	User Log?	Review entries in USER log - set / unset, alarm events, etc.	15-2
	Access Log?	Review entries in Access Control log (if facility used)	15-3
	Engineer Log?	Review entries in Engineer log - ie fault information and other significant entries	15-3
	Clear Logs?	Use option with caution when certain information no longer required.	15-3
ENGINEER TESTS?		Access to Engineer Test modes, including control of Soak Test function. Always exit engineer mode and re-enter before testing if ANY system data has been changed.	14-3
DIAGNOSTICS?		Access to range of diagnostic information, and calibration routines.	14-5
SET UP DOWNLOADING?		Programming of information relevant to use of the system in Downloading scenarios.	22-3

Main Menu	Sub Menu	Function	Ref
SET UP DIGI / SMS?		Programming of information relevant to remote signalling of alarm, etc. messages - to ARC or text (SMS) messages to mobile 'phones.	23-3
EXIT ENGINEER MENU?		Can also be performed by use of A key.	13-2

Castle Care-Tech Ltd. is an independent British company, specialising in the design and manufacture of high-quality security control equipment.

Our Quality Assurance procedures are approved to BS.EN.ISO.9001, and are rigidly applied in all aspects of design, manufacture and servicing of all products.

Suggestions for improvement of these products, or manuals, will be gratefully received. Please address them to the Product Development Manager at:

Castle Care-Tech Ltd
North Street, Winkfield, Windsor, Berkshire, SL4 4SY
t Sales: 01344 887788 Technical Support: 01344 886767
f 01344 890024 **e** sales@castle-caretech.com

NOTE: Certain features are available only on certain models within the range – these are identified on the relevant pages.

Castle Care-Tech Ltd. reserves the right to adjust the specifications of these systems, at any time and without notice, in the interests of product improvement.

Castle Care-Tech Ltd.
INSTRUCT 62
Issue 3.1 Sept 2002

Chapter 1

INTRODUCTION

The Euro-MERiDIAN range has been designed to offer a choice of options to suit most European security applications.

- All systems can be controlled using PIN Codes, proximity tags or key- (or other) switches).
- All products are compatible with the COM9600 DigiModem for Remote signalling, Down-loading and/or SMS text messaging.

Training courses are available on application to the Sales Office.

PRINCIPAL CHANGES SINCE PREVIOUS ISSUE

The following functionality, etc. has been enhanced since the last issue of this manual:

- New keypad introduced with no zones / outputs (for Euro-10/12). Designated "Standard Keypad." Original keypad now "Deluxe"
- Full compliance with DD243:2002 requirements, (see 9-4)
- Additional zone types / timers for above (see 13-8, 11, 17)
- Engineer force set available with 2 zones live for confirmation testing (see 14-2)
- Set points 'set' levels choice available (Euro-10-28 - see 13-13)
- Improved 'silent set' (see 5-5)
- Additional 'Entry Shock' zone type for new confirmation scenarios (see 9-9, 13-9.)
- Engineer menu may be transferred between keypads (see 13-2)
- Enhanced Keyswitch operation.
- Walk test now sounds once only per zone
- New soak test menu (see 14-3)
- Download whilst system set no longer possible (see 22-2)

EN-50131

Euro-MERiDIAN is suitable for installation in systems specified as follows:

Product	Security Grade:	Environment Class:
Euro-10 **	1 and 2	1 and 2
Euro-12	1 and 2	1 and 2
Euro-22	1 and 2	1 and 2
Euro-28	1 and 2	1 and 2
Euro-44+	1 to 3	1 and 2
Euro-134*	1 to 3	1 and 2
Euro-256*	1 to 3	1 and 2

* - Euro-44+ fitted with MSX Card.
** -Availability to be announced

Power supplies conform to EN.50131-6

BS4737

Euro-MERiDIAN may be used to control a system installed to BS.4737 standards.

COMPLIANCE STATEMENT

The Euro-MERiDIAN range complies with requirements of the European "EMC Directive" (89/336/EC) and the "Low Voltage Directive" (72/23/EC and 93/68/EC).

It is essential that the recommendations in this manual be followed, and that equipment and wiring be installed to avoid the effects of potential sources of interference.

DD243:2002

The Euro-MERiDIAN range fully complies with requirements of DD243:2002. This has been verified using the BSIA "Manufacturers Check List for Compliance with the Requirements of DD243:2002."

ALL appropriate facilities and options are available for systems using sequential confirmation signalling EXCEPT:

Zeroing of 'Confirm Timer' if first zone to alarm retriggers (see 9-6).

EXPANSION OF Euro-44 +

Provision is made for an MSX Card (MERiDIAN System EXpander) to be slotted in to the Euro-44 + End Station.

This enables the system to be expanded, and the facilities available further enhanced. For details, see Chapter 24.

WARRANTY

Castle Care-Tech Ltd. will repair or replace, at our discretion, any product developing a fault within 2 years, free of charge.

If the failure was the result of physical damage, unauthorised modifications or operating the system outside of its specification, we reserve the right to raise an appropriate repair charge.

REPAIRS

Products for repair should be returned to the factory, suitably packed to prevent damage (including damage from electrostatic discharges), and be accompanied by the full return address.

It is ESSENTIAL that full details of the fault are reported.

Note: If a software upgrade is specifically required, this should be clearly stated. For upgrades from issue 2.05 or later this will be chargeable. Older software issues will be upgraded automatically during repair to permit the use of our current test equipment.

"Sequentially Confirmed" alarm systems:

Please note the following sequence of events for 'unconfirmed' alarm activations, where "unset with portable ACE" is used, and ensure that all potential users are made aware of these system responses:

	Local response	Signalled response to ARC
System Set	Exit time ends	'Set' signal
Alarm generated	Alarm sounds	'Intruder' signal (Code 3)
'Siren time' ends	Alarm silences	-
BEFORE END OF 'CONFIRMATION TIME:		
Key-holder opens FX zone	"Entry Time" starts, Alarm sounds	-
Key-holder unsets system	Sounders silenced	'Unset' signal, 'Intruder' signal restores

Note that what appears to be an alarm condition is generated. However, this is NOT signalled, and has NO effect on the system response for "confirmation" purposes, but provides the maximum possible deterrent to a potential intruder returning to the site after the 'unconfirmed' alarm has silenced.

In the event of the system NOT being unset before the end of the entry time, confirmed response will follow after the triggering of the NEXT zone OFF the entry route, provided that 'Confirm Timer' has not expired.

If the "confirm timer" expires, the system will perform a complete "reinstatement" as prescribed by DD243:2002, with 'zone omit at rearm' signal if appropriate. A keyholder entering after that time will receive normal system response (ie entry time).

THIS PAGE LEFT BLANK FOR NOTES

Chapter 2

SYSTEM COMPONENTS

This chapter summarises the components available to complete the Euro-MERiDIAN system.

Note: please check availability of items marked ** with Sales office.

	End Stations	
**	Euro-10 1.2 Amp	EUR-
**	Euro-10 1.5 Amp	EUR-
	Euro-12 1.2 Amp	EUR-
	Euro-12 1.5 Amp	EUR-
	Euro-22 1.5 Amp	EUR-151
	Euro-28 1.5 Amp	EUR-161
	Euro-44+ 1.5 Amp	EUR-080
	Euro-44+ 2.5 Amp	EUR-081
	MSX Expansion Cards	
	MSX 134 Card	MSX-134
	MSX 256 Card	MSX-256
	Setting devices	
	Standard LCD Keypad (integral tag reader)	EUR-020
	DeLuxe LCD Keypad (integral tag reader)	EUR-021
	Set/Unset Tag Reader (Internal)	EUR-022
	Set Unset Tag Reader (External)	EUR-029
	Proximity KeyFobs (5)	EUR-023
	Proximity Cards (5)	EUR-024
	Card clip	EUR-025
	Card Chain	EUR-026
	Zone Expansion	
	TMZ 2 Zone expander / Area Sounder module	EUR-030
	ZEM 4 EOL (for use with Euro-12)	EUR-033
	ZEM 8EoL/30iD zone expander	EUR-031
	ZEM with PSU	EUR-032

	Output Expansion	
	Output Module – 16 o/ps	EUR-035
	Output Module with PSU	EUR-036
**	Output Module - STU footprint only	EUR-040
	Plug-on Relay interface	EUR-087
**	Snap-in STU output interface (for Euro-10/12)	EUR-
	TMZ Area Sounder module / 2 Zone expander	EUR-030
	Communications	
	Euro-COM 9600 Snap-in DigiModem	EUR-052
	RS-232 Interface card/ loom (connect PC to End Station)	EUR-054
	RS-232 Interface loom (connect PC to MSX card)	EUR-055
	Euro-InSite PC software	EUR-050
**	Snap-in STU output interface (for Euro-10/12)	EUR-
	Digi/STU Loom for Euro-22/28	CT-1105
	Access Control	
	Access Reader	EUR-061
	Access Door Station Controller with PSU	EUR-063
	Access Pack (EUR-061 + 063)	EUR-060
	Guard Tour	
	Guard Tour Reader (Internal)	EUR-028
	Guard Tour Reader (External)	EUR-027

Spare PCBs

**	Euro-10 ES PCB	EUR-
	Euro-12 ES PCB	EUR-079
	Euro-22 ES PCB	EUR-090
	Euro-28 ES PCB	EUR-092
	Euro-44 + 1.5 Amp ES PCB	EUR-083
	Euro-44 + 2.5 Amp ES PCB	EUR-084
	ZEM PCB	EUR-085
	Output Module PCB	EUR-086
	Access Door Station Controller PCB	EUR-088
	Remote PSU PCB	EUR-089

Chapter 3

SYSTEM ARCHITECTURE

This chapter identifies how Euro-MERiDIAN system components wire together, and advises on the location of those components around the site, for the most effective use of the system. Components may be connected to the RS-485 bus in any order.

A: Euro-10

Maximum 10 iD Zones.

Normally supplied with
STANDARD Keypads

AVAILABILITY TO BE ANNOUNCED

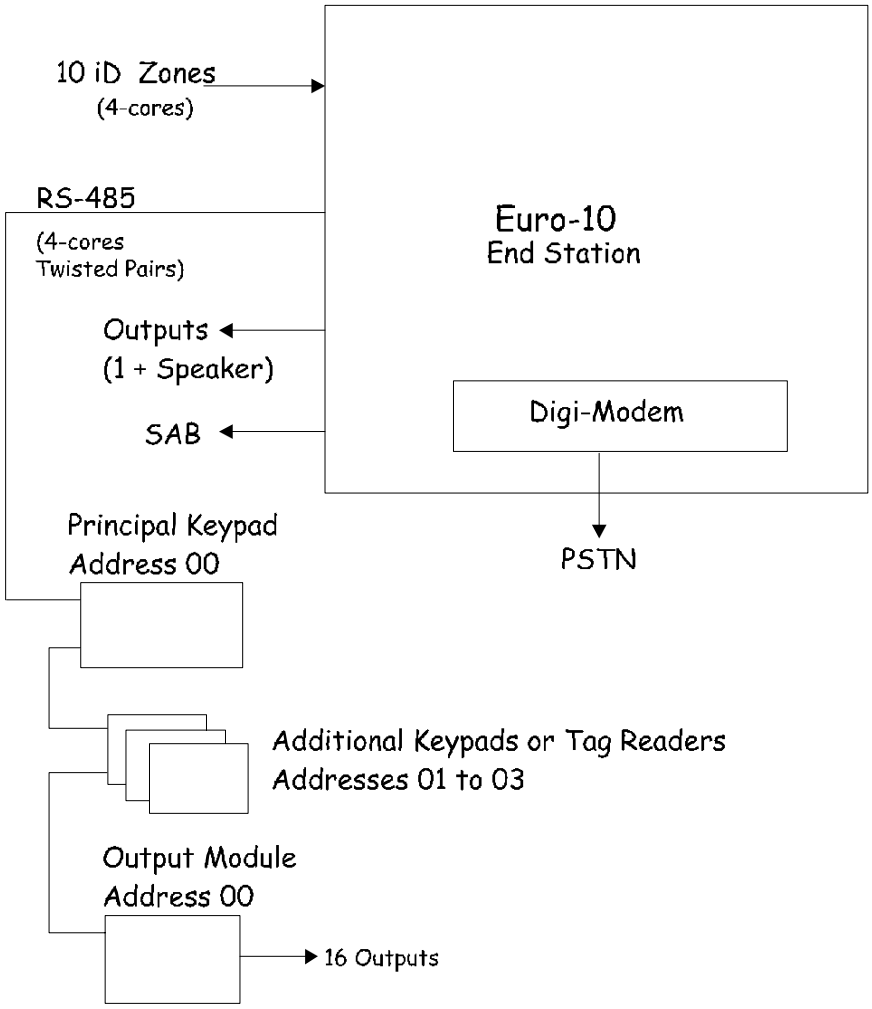

B: Euro-12

Max 12 End of Line Zones.

Normally supplied with
STANDARD Keypads

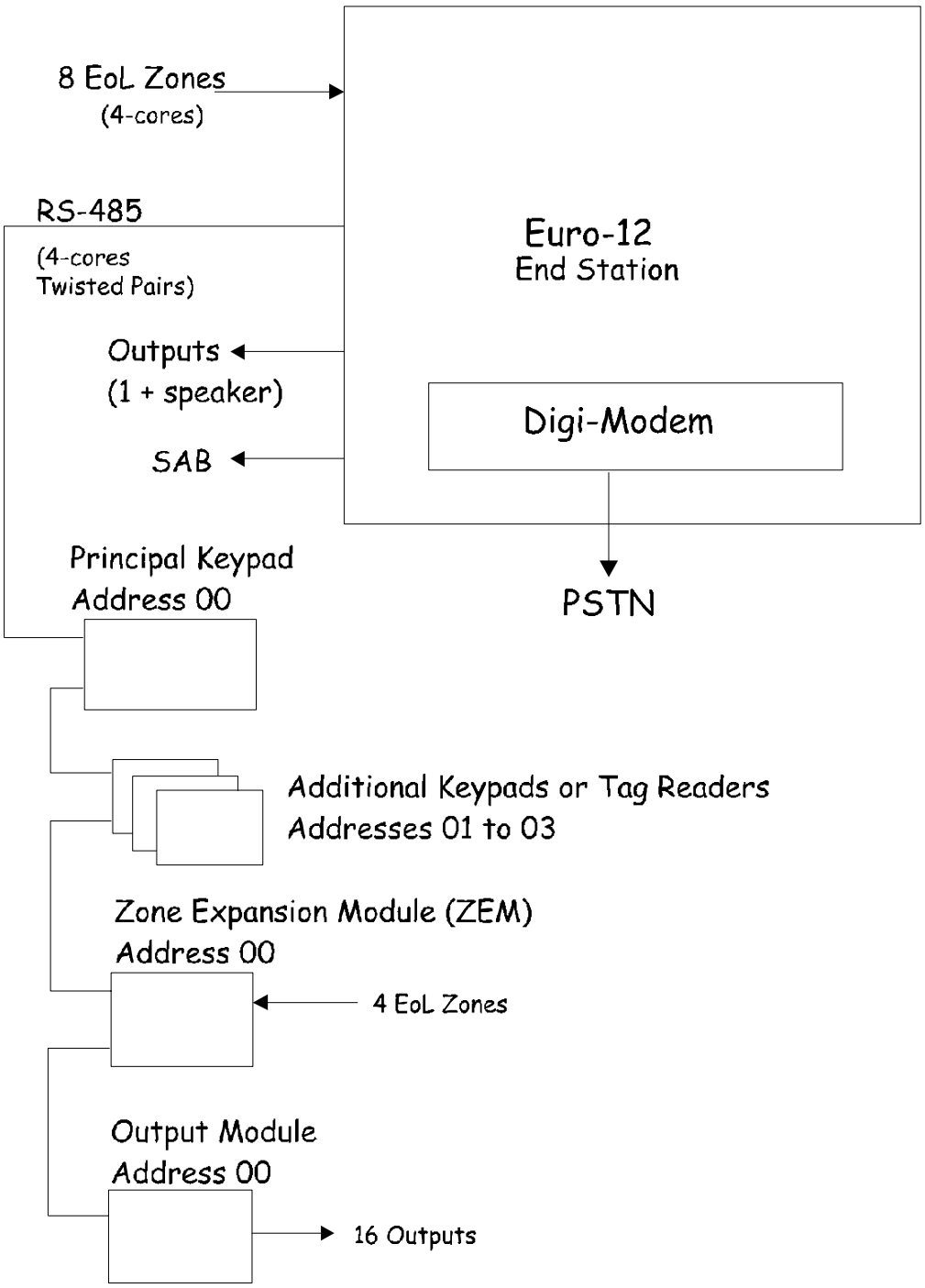

C: Euro-22

Max 22 End of Line zones

Normally supplied with DELUXE Keypads

NOTE: Keypad zones are NOT available if "STANDARD" Keypads are used.

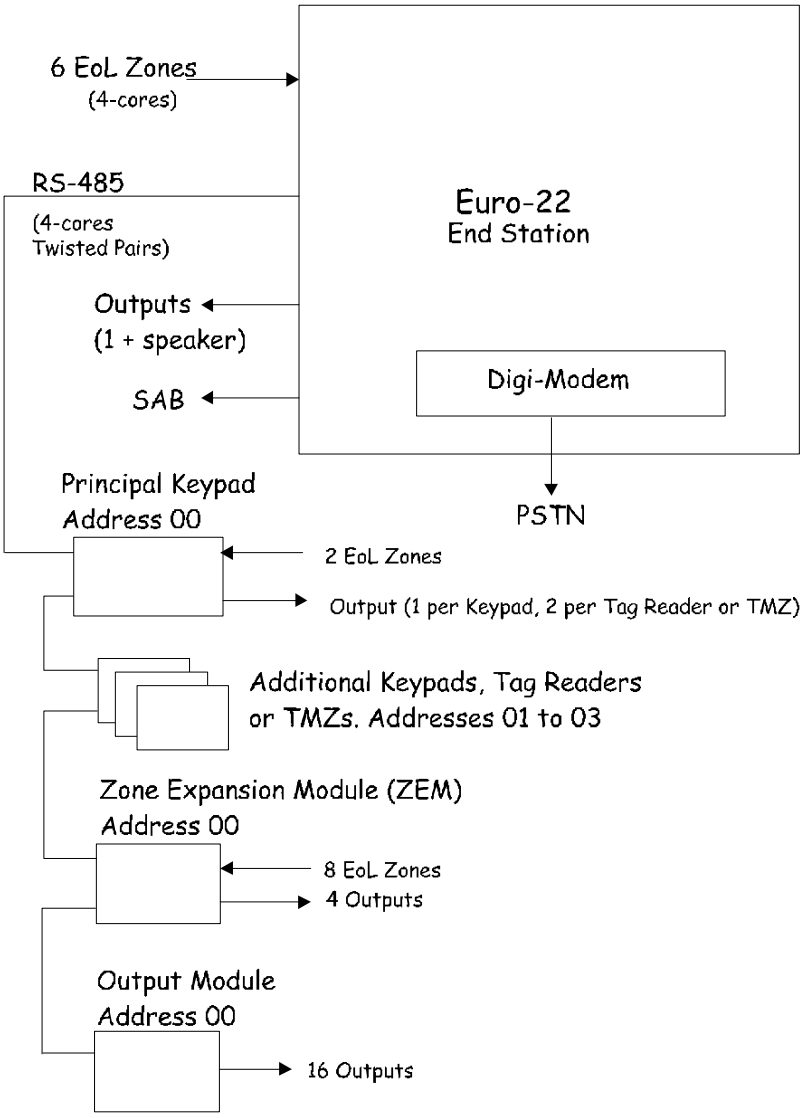

D: Euro-28

Maximum 28 zones: 20 iD points plus 8 EoL zones.

Normally supplied with DELUXE Keypads.

NOTE: Keypad zones are NOT available if "STANDARD" Keypads are used.

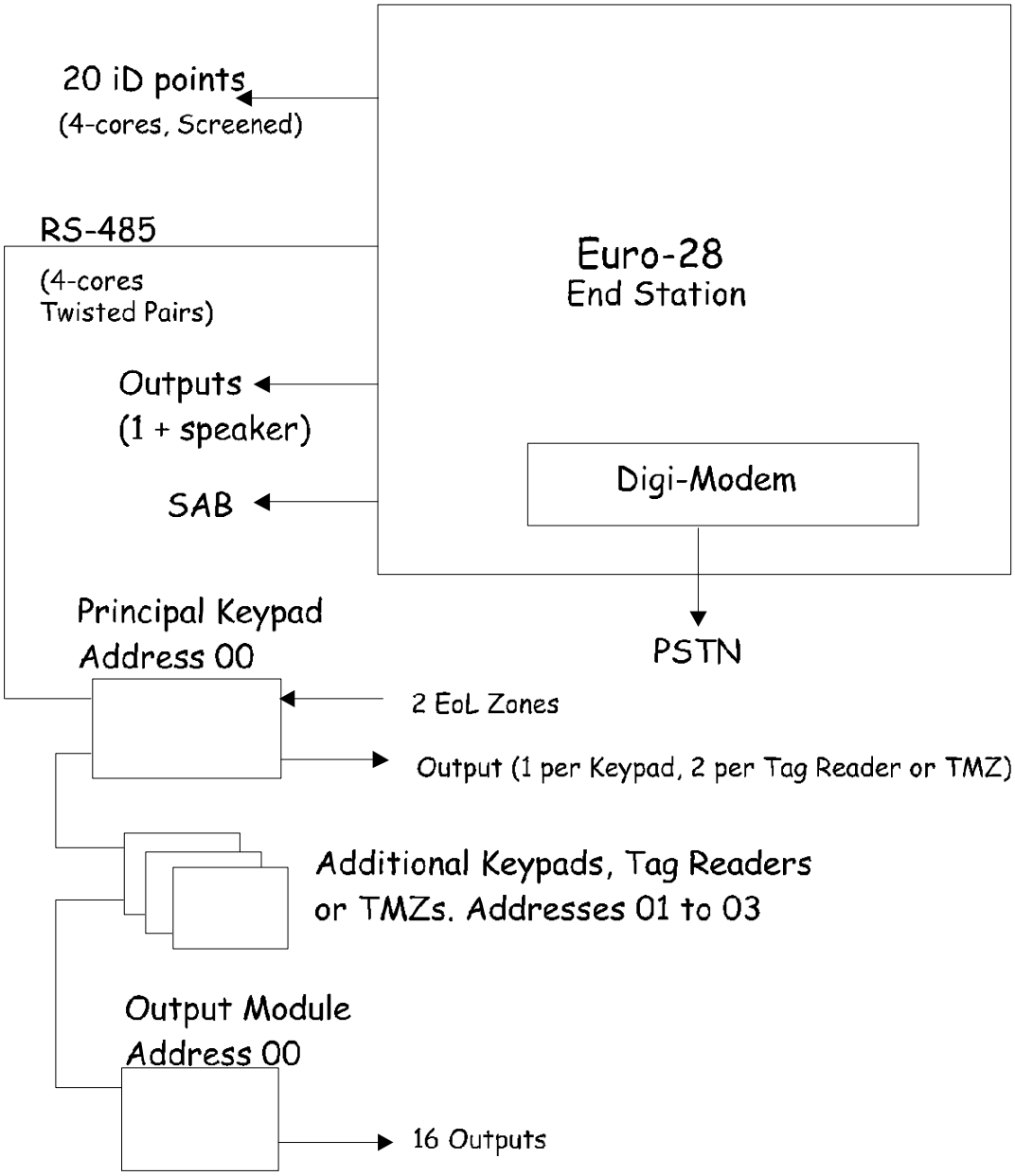

E: Euro-44+ EoL Mode

Maximum 44 End of Line zones.

Normally supplied with DELUXE Keypads.

NOTE: Keypad zones are NOT available if "STANDARD" Keypads are used.

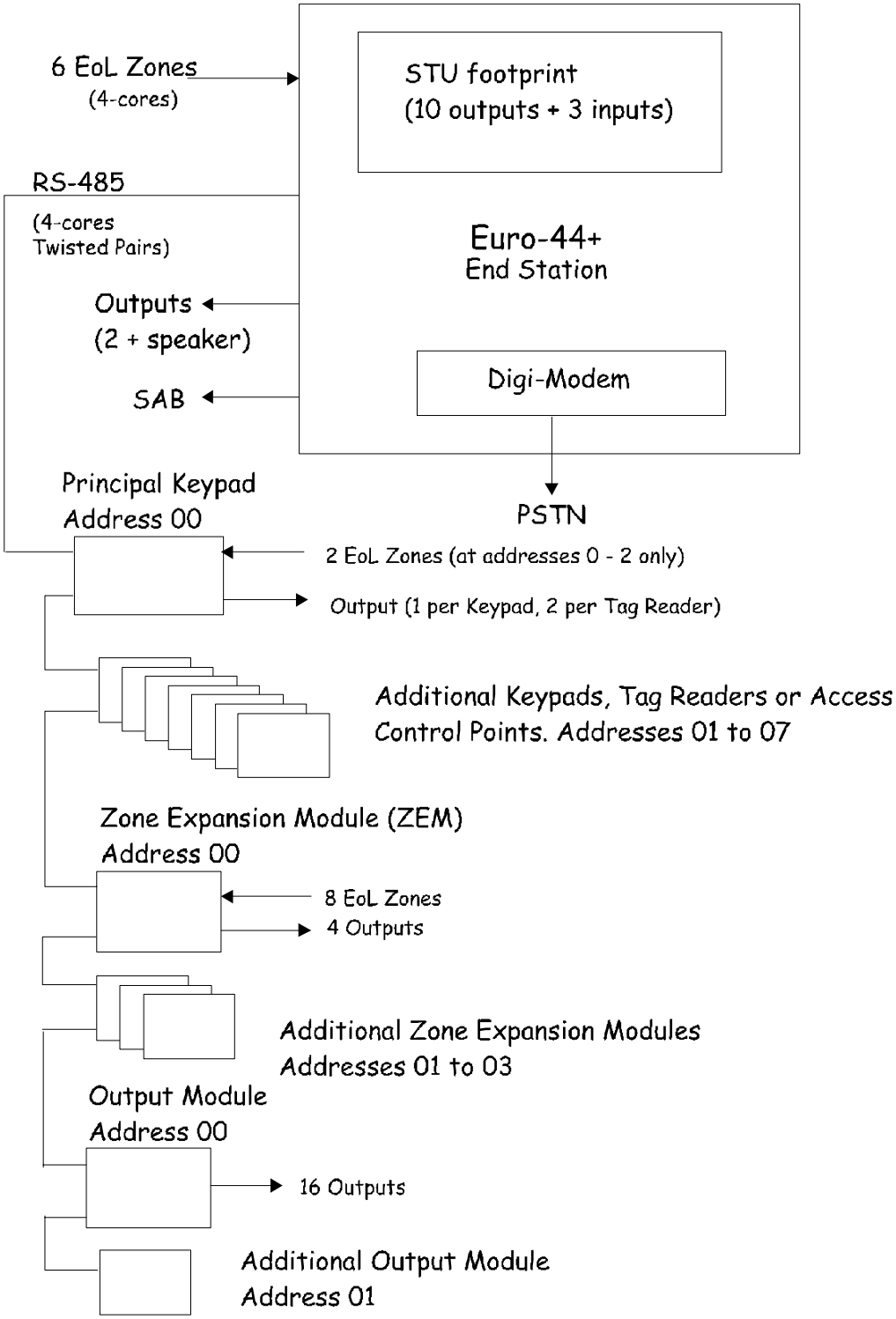

For details with MSX Card fitted, refer chapter 24.

F: Euro-44 + iD Mode

Maximum 44 zones: 30 iD points plus 14 EoL zones.

Normally supplied with DELUXE Keypads.

NOTE: Keypad zones are NOT available if "STANDARD" Keypads are used.

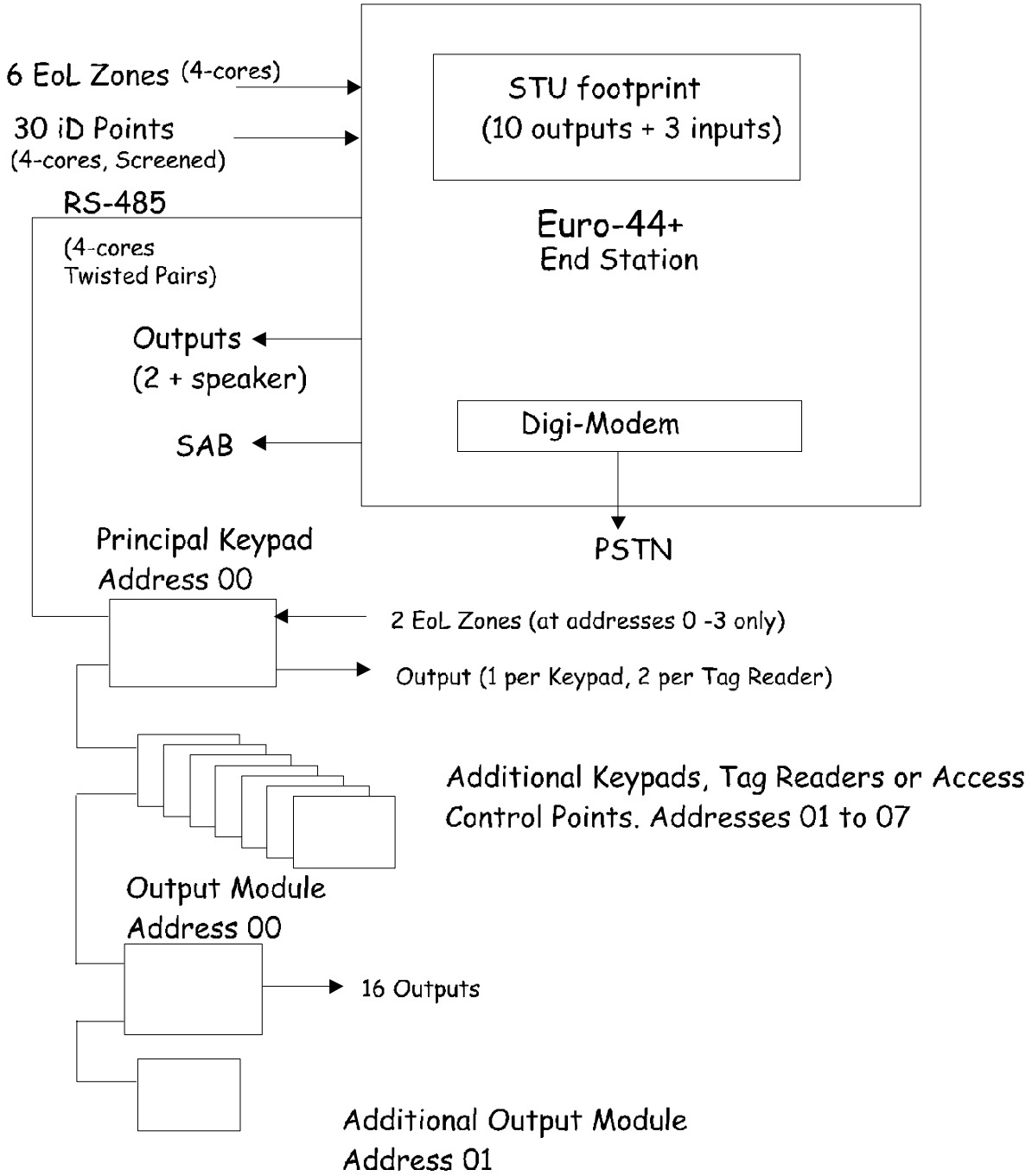

For details with MSX Card fitted, refer chapter 24.

G: LOCATING COMPONENTS

These components all connect via the RS-485 bus, and may be wired in any order.

Avoid siting system components close to equipment switching high frequencies, or using radio frequencies in its operation.

END STATION

The End Station should be located where suitable for wiring of the system, taking due note of the availability of AC mains.

KEYPADS and SET/UNSET PROXIMITY TAG READERS

These should be located in the most convenient points for the client in using the system.

Keypads are best located with the display around 10 cm below average eye level.

Tag Readers used as Ward Controllers (see chapter 16) should be mounted OUTSIDE the ward area they control.

NOTE: To ensure that Tag response is not impaired, do **NOT** locate Keypads and Tag Readers (including Access Readers)

Within 1 metre of each other (including opposite sides of a wall!)

On, or close to, a metal surface.

ENGINEER KEYPAD

Access to the Engineer menu is available from any keypad on the system. To transfer the menu from one keypad to another, simply press 'B' at the keypad to which the menu is to be transferred.

Where an engineer requires an additional keypad adjacent to the End Station during testing, etc. this may be achieved as follows:

1. Enter Engineer mode from a system keypad
2. Plug a spare keypad onto the End Station (using 'Engineer Keypad Loom')
3. Use keypad address menu (see page 12-3) to code the additional keypad to an unused address
4. Within engineer menu, enter 'Keypad programming' section, and enable the additional keypad, thus permitting its use.
5. On completion, disable the keypad in engineering before disconnecting it, and finally leaving engineer mode.

ZONE EXPANDER UNITS

Zone Expander Units (ZEMs) are designed for distribution of zone inputs, also outputs, to strategic locations around the site.

NOTE: A Zone Expander used in iD mode should NOT be located more than 10 metres from the power supply it is fed from.

TMZ UNITS

TMZ units provide two additional zones each, plus two outputs – one of which is dedicated as 'loudspeaker' and may be used to provide 'area' loudspeakers.

On Euro-10 and 12, TMZ modules function ONLY as extension speaker outputs.

OUTPUT MODULES

Output Modules provide additional programmable outputs, and should be sited where convenient.

NOTE: Ensure that adequate power is available for the outputs.

ACCESS CONTROL EQUIPMENT

Details in respect of Access Control equipment are shown in Chapter 18.

GUARD TOUR SYSTEMS

Information concerning Guard Tour systems is shown in Chapter 19.

INTELLIGENT POWER SUPPLIES

Please ensure that adequate power is available for all possible system functions.

Each Zone Expander Unit, Output Module, or Access controller may be plugged onto an Intelligent Power Supply, at any suitable point on the system. Full diagnostic analysis of voltage and current from these power supplies is available through the system.

Strategic siting of the End Station and powered units should minimise the need for any additional power supplies for detectors, sounders, etc. However, if Keypads or Set/Unset Tag Readers are being used more than 100 metres from the nearest supply point, additional power supplies may be required, sited as close as possible to the equipment being powered.

Chapter 4

SPECIFICATIONS

This chapter outlines the essential specifications for the Euro-MERiDIAN range.

Castle Care-Tech Ltd. reserve the right to change these specifications at any time, without notice, in the interests of product improvement.

Please ensure that this information is used in designing the system, so that it can be installed and programmed as intended, and will continue to function reliably. In particular, system outputs and power supplies must be used within their rated specifications.

A: EN-50131

System components (including the expansion products) are suitable for use in systems specified as follows:

Product	Security Grade	Environment Class
Euro-10	1 and 2	1 and 2
Euro-12	1 and 2	1 and 2
Euro-22	1 and 2	1 and 2
Euro-28	1 and 2	1 and 2
Euro-44 +	1 to 3	1 and 2
Euro-134 *	1 to 3	1 and 2
Euro-256 *	1 to 3	1 and 2
External Tag Reader Head	-	1 to 4 (IP65)

* - Euro-134 and 256 are simply Euro-44 + fitted with MSX Card.

B: SYSTEM SPECIFICATIONS

Euro-	10/12	22/28	44 +	134	256
Power Supply	1.2 or 1½A	1½A	- - 1½ or 2½A - -		
Zones (max)	10 / 12	22 / 28	44	134	256
Set points (max)	4	4	8	16	30
of which, max keypads:	4	4	8	9	16
Level (Part) Sets	4	4	Option: 4	-	-
Full Areas	-	-	Option: 4	8	14
Wards (max)	3	3	7	15	16
User/ Manager Codes †	12	20	100	230	500
Duress/ Guard Codes †	10	10	20	20	20
Logs	400	400	750	2000	3000
Access Control (max)	NO	NO	7	15	16
Output Modules	1	1	2	8	8

† - Plus Engineer and Master Manager Codes

C: OUTPUT CAPABILITIES

At End Station:

Hold Off	650mA (continuous)	Max 800mA in alarm
Outputs 1 – 2	800mA	
Output 3	100mA	
Output 4	100mA	

Present on Euro-44+ and above.

Relay (A)	3 A	Volt free change-over contacts

Present in Euro-44+ and above.
May be selected as 'Watchdog' or 'Output 3'

Loud-speaker	Max load 8 ohms

Suitable for 1x8 ohm, or 2x16 ohm speakers

'STU' pins	1mA

Note: a plug-on interface is available to provide alternative drive capability for these outputs, see below.

12v outlets	800mA
on ZEM	300mA

At Keypad:

Output 1	100mA

At Tag Reader:

Outputs 1 - 2	100mA

At TMZ Zone Expander / Area Sounder Module:

Output 1	100mA
Output 2	Loudspeaker – max load 16 ohms

At ZEM Zone Expander Unit:

Outputs 1 - 4	250mA

Note: restricted to maximum of 400mA simultaneous loading (see 11-12).0

At Output Module:

Outputs 1 – 16	250mA

Note: restricted to maximum of 400mA simultaneous loading (see 11 -12). A plug-on interface is available to provide alternative drive capability for these outputs, see below.

Plug-on Relay Interface

O/Ps R and S	800mA	
Relays 1 - 6	2.5 A	Volt free relay contacts

May be plugged onto End Station 'STU pins' or Output module.

D: HOUSING DIMENSIONS

Item	Size	Height	Width	Depth
Keypad		100	166	30
Set/Unset Tag Reader or TMZ		100	70	30
Euro-10/12 1.2 A	5	275	340	95
Euro-10/12 1½A	3	320	250	97
Euro-22/28	3	320	250	97
Euro-44 +	4	320	390	97
ZEM or Output Module	1	152	219	37
Powered ZEM or Output Module, or Access Controller	3	320	250	97
	See note on page 4-3 re PS rating and alternative '4' housing.			

All dimensions in millimetres.

Battery accommodation:

Size	3, 5:	Max. 7Ah
	4:	Max. 17Ah

Note: All housings are steel, except size "5" (Polycarbonate).

E: ELECTRICAL SPECIFICATIONS

Mains Supply 230v (220 to 240v) AC.
Max 250mA

Fuse	1.2A PS:	150mA	slow blow
	1½ A PS	250mA	
	2½ A PS	500mA	

Euro-10/12 END STATION:

Power Supply 13.75v DC
1.2 A (800mA continuous) or
1½ A (1A continuous)

Battery 2.9 or 7Ah

Fuses:
Battery 1.5A quick blow
12v outlets 800mA quick blow

Euro-22/28 END STATION:

Power Supply 13.75v DC
1½ Amp (1A Continuous)

Battery 7Ah

Fuses:
Battery 1.5A quick blow
12v outlets 800mA quick blow

Euro-44+ END STATION:

Power Supply 13.75v DC
1½ Amp (1A continuous) or
2½ Amp (1½ A Continuous)

Battery 7Ah or 17Ah

Fuses:
Battery 3.15A quick blow
12v outlets 800mA quick blow

All system power supplies are monitored continuously

Condition and charging of all batteries are continuously monitored, with battery 'load' testing available.

Batteries protected against deep discharge (Euro-44+ and above).

INTELLIGENT POWER SUPPLIES:

	"3" housing (standard)	"4" housing
Power Supply	13.75v DC 1½ A * (1A continuous)	13.75v DC 2½ A (1½ A continuous)

* Suitable for maximum instantaneous loads (up to 15 seconds) of 2½ A.

Battery	7 Ah	7Ah or 17Ah

Fuse:
Battery 3.15A quick blow

Quiescent Current Drain:

Euro-10/12 End Station	70mA
Euro-22/28 End Station	75 mA
Euro-44+ End Station	90 mA
Standard Keypad B/L ON	130mA*
Standard Keypad B/L OFF	60mA*
Deluxe Keypad – B/L on	150mA*
Deluxe Keypad – B/L off	80mA *
Set/Unset Tag Reader	60mA *

* Plus 10mA in alarm condition.

TMZ zone expander	40mA
ZEM Zone Expander	40mA
Output Module	40mA
Access Door Station	100mA
External Reader Head	60mA
MSX Card	
Slot-in Digi-modem	

F: WIRING SPECIFICATIONS

The following specifications must be observed when installing Euro-MERiDIAN alarm systems:

A: General Principles:

1	Routing:	NO alarm system cable should be run with other cables carrying AC or digital signals
2	Insulation:	Protected by the use of grommets, etc. where appropriate.
3	Specifications:	The following specifications for cable types and distances are important for reliable operation.

B: RS-485 Wiring (Keypad, etc. connections):

1	Cores	4- core minimum. Use of 6-core and doubling up supply cores is beneficial to minimise volt drop, but NEVER double communications connections (D3-4)
2	Cable type:	Twisted pair, eg Belden 9744 (unscreened) or 9502 (screened).
3	Wiring format:	Parallel, 'daisy-chained.'
4	Cable length:	Overall network max 1 Km.
5	Termination:	Extreme end points fitted with 120Ω resistors between D3 / D4

C: End of Line Zone Wiring

1	Cores	4- core
2	Cable type:	Standard alarm cable; screened if required by environment.
3	Wiring format:	Detectors individually wired, using EoL resistors, mounted at detector.
4	Cable length:	Max 1 Km per detector.

D: *iD* Wiring

1	Cable type:	Screened. 4- core minimum. Doubling up supply cores will minimise volt drop to detectors. Doubling of iD cores is also possible
2	Wiring format:	Any parallel format, except 'ring main' loops.
3	Termination	0.01μF capacitor between iD+/- at end of each cable run.
4	Cable length:	Max 100 metres for any cable run.
5	Biscuit location:	Must be wired directly to detector terminals.
	If it is impossible to locate the biscuit in this way, a 'DP' junction box must be used.	
6	Checks:	All commissioning checks must be performed and recorded.
7	Warning:	In some situations, especially take-over sites using existing wiring, iD technology may not be suitable.

Castle Care-Tech Ltd. cannot be held responsible for problems arising from failure to follow this specification

G: LOCATION OF ZONES

The zones on the system are distributed as follows:

Euro-	10	12	22	28	44 +		134		256	
Mode	iD	EoL	EoL	*iD*	EoL	*iD*	EoL	*iD*	EoL	*iD*
iD zones										
End Station	1 -10	-	-	1 –20	-	1– 30	1-30	1 – 30	1-30	1 – 30
ZEM 0	-	-	-	-	-	-	-	31-60	31-60	31-60
ZEM 1	-	-	-	-	-	-	-	61-90	61-90	61-90
ZEM 2	-	-	-	-	-	-	-	91-120	91-120	91-120
ZEM 3	-	-	-	-	-	-	-	-	-	121-150
ZEM 4	-	-	-	-	-	-	-	-	-	151-180
ZEM 5	-	-	-	-	-	-	-	-	-	181-210
ZEM 6	-	-	-	-	-	-	-	-	-	211-240
EoL zones										
End Station	-	1-8	1 – 6	-	1 - 6	31-36	-	-	-	-
ZEM 0	-	9-12	7 – 14	-	7-14	-	31-38	-	-	-
ZEM 1	-	-	-	-	15-22	-	39-46	-	-	-
ZEM 2	-	-	-	-	23-30	-	47-54	-	-	-
ZEM 3	-	-	-	-	31-38	-	55-62	-	121-128	-
ZEM 4	-	-	-	-	-	-	63-70	-	129-136	-
ZEM 5	-	-	-	-	-	-	71-78	-	137-144	-
ZEM 6	-	-	-	-	-	-	79-86	-	145-152	-
ZEM 7	-	-	-	-	-	-	87-94	-	153-160	-
ZEM 8	-	-	-	-	-	-	95-102	-	161-168	-
ZEM 9	-	-	-	-	-	-	103-110	-	169-176	-
ZEM 10	-	-	-	-	-	-	111-118	-	177-184	-
ZEM 11	-	-	-	-	-	-	-	-	185-192	-
ZEM 12	-	-	-	-	-	-	-	-	193-200	-
ZEM 13	-	-	-	-	-	-	-	-	201-208	-
End Station	-	-	-	-	-	-	119-124	121-126	209-214	241-246
K'PAD 00	-	-	15-16	21-22	39-40	37-38	125-126	127-128	215-216	247-248
K'PAD 01	-	-	17-18	23-24	41-42	39-40	127-128	129-130	217-218	249-250
K'PAD 02	-	-	19-20	25-26	43-44	41-42	129-130	131-132	219-220	251-252
K'PAD 03	-	-	21-22	27-28	-	43-44	131-132	133-134	221-222	253-254
K'PAD 04	-	-	-	-	-	-	133-134	-	223-224	255-256
	NOTE: Zones are **NOT** available on Standard Keypads								etc.	

THIS PAGE LEFT BLANK FOR NOTES

Chapter 5

THE USER INTERFACE

This chapter outlines how the user interface of Euro-MERiDIAN has been designed to be as user-friendly as possible, and thus minimise the risk of false alarms or reduced security levels for the system.

A: SECURITY PATTERNS

a) LEVEL SETTING

(Euro-10, 12, 22 and 28, also option on Euro-44+)

The user has the choice of setting security level A or B or C or D. Each 'set' level will provide a different pattern of coverage, dependant upon the programming of the relevant zones.

For example, the front door may need to be active in all setting scenarios, so would therefore be allocated to levels A,B,C and D when programming. On the other hand, the master bedroom may need to be active only if ALL of the system is set, and would therefore be allocated to level 'A' only. The kitchen may need to be omitted when the dog is left at home, and at night, and would thus be programmed to 'A' and 'C' – etc.

NOTE: The 'Sets Areas' 'Unsets Areas' and 'Located In Areas' programming selections are NOT required when this mode is in use.

b) AREA SETTING

(Euro-134 and 256, also default option on Euro-44+)

The user has the option of setting any combination of independent areas, and of 'adding to' or 'subtracting from' the list of areas set at any time.

Normally zones will be allocated to a single area, but the application may require some zones to be allocated to multiple areas. In this case, the choice of 'ANY' (zone live if any of the relevant areas are set) or 'ALL' (zone live only if all relevant areas are set) will apply for those zones.

B: OPERATION

In the simplest case, entering a code (or presenting a tag) will immediately set or unset (depending upon current status) all security levels/areas allocated to that code, and for which the setting point is valid. T hus functionality can be programmed into the system, permitting the user to use a single, consistent action to produce the desired response.

If a multiple area code is entered at a suitable Keypad, when some of the relevant areas are set and others unset, the default response will be to set the additional areas. If entry time has started, then the response will be to unset those areas which are set.

FLEXI-SET

'Flexi-Set' may be selected (individually for each code), which will present the selected code-holder(s) with the option to select individual area(s) from those available with his code / setting point combination.

If 'flexi-set' is allocated to a TAG, this will be functional ONLY if the tag is presented at a Keypad.

'Flexi-set' is NOT available when Level Setting is in use.

With effect from software 3·1:

Flexi-Set now applies during the setting operation only. If a part of the system for which the Code/tag is valid is already set, the system will UNSET that part of the system.

Eg, LEVEL Setting system Part Set B, code/tag presented will UNSET system.

AREA setting system set areas AB; code/tag valid for B presented will UNSET B, leaving A set.

GENERAL

To ensure maximum simplicity, along with flexibility in use, it is implied that the number of Setting Points on the system should not be skimped.

It is also vital that special care be taken when programming the Setting Points (Keypads or Set/Unset Tag Readers) and codes or tags, as described in this chapter.

C: SETTING POINT OPTIONS:

a) KEYPADS

In addition to the LCD, 5 system LEDs are provided, also 4 Area LEDs (on ABCD Keys), as described in Chapter 6.

Codes may be 4-, 5- or 6- digit, and be programmed as 'User' or 'Manager' (by Manager) or 'Duress' or 'Guard' (by Engineer).

DELUXE Keypads have connections available for outputs and zone inputs, also additional indications for activity involving the four principal system areas. These are NOT available on STANDARD Keypads.

b) SET/UNSET TAG READERS

These have the same 5 system LEDs as the Keypads.

In addition to use as a setting point, these may be programmed as 'Ward Controllers' (see Chapter 16).

c) INTELLIGENT SETTING

(i) LEVEL SETTING

This will function only if a code valid for 'A' (ALL) is used to set the system. The system will commence 'full' setting at 'intelligent' volume level.

If the nominated 'intelligent' zone is activated during exit time, the system will switch automatically to level 'B' set.

(ii) AREA SETTING

This will function ONLY if a code including area 'B' is used. The system will commence setting the areas authorised by the code, with exit tone at 'intelligent' level.

If the nominated 'intelligent' zone is activated during exit time, the system will automatically OMIT area 'B' and 'quick-set' remaining areas.

NOTE: To be able to unset successfully, a detector MUST be sited to start entry time before unsetting.

(iii) ALL SYSTEMS

If a final exit (FX) zone is triggered before the 'intelligent' zone, the system will switch to normal exit mode and volume and continue to set according to code validity.

NOTE: It is NOT possible to 'Intelligent set' other combinations of areas/levels.

If 'intelligent set' is in use, the exit route MUST be designed so that an 'FX' detector can only be triggered when the system is definitely required to 'fully' set.

The 'intelligent' detector MUST be sited to ensure that ALL potential system users are correctly detected. Some "pet-immune" detectors are not suitable.

d) 'SETS AREAS'

This option programmes the areas that can be set from the Setting Point. This will be read in conjunction with the areas allocated to a code, so that, for example:

'AB' code at 'A' keypad will set only A

'B' code at 'AB' keypad will set only B. etc.

The system will respond by setting the resulting valid areas. Keypad sounders respond only to signals for areas they control.

Euro-10,12,22,28 have an alternative option **"DEFAULT LEVEL [A]"**. This permits the selection of a single level that will be SET if a code/tag is entered at that setting point. If the system is already set, the operation will UNSET to the limit of validity of the code/tag used.

e) 'UNSETS AREAS'

This option programmes the areas that can be unset from the Setting Point. This will be read in conjunction with the areas allocated to a code, so that, for example:

'AB' code at 'A' keypad will unset only A
'B' code at 'AB' keypad will unset only B. etc.

The system will respond by unsetting the resulting valid areas. Keypad sounders respond only to signals for areas they control.

It is essential that the system be programmed such that all areas that may be set can also be unset; and that all areas to which zones are allocated can be unset.

Notes: 'Set' and 'Unset' allocations for individual setting points may differ – eg a bedroom keypad may be programmed to **set** only the downstairs area, but **unset** the entire system, etc.

If a multi-area code **without** the 'flexi-set' attribute is used at an appropriate keypad whilst part of the system is set, the remaining valid area(s) will set, **UNLESS** entry time has started, in which case the valid areas will unset.

From Software 3·1, the system will always default to unsetting all areas for which the code is valid.

f) LOCATED 'IN' AREAS

When setting from a keypad / reader located 'IN' the area being set, the programmed exit mode/time will apply. When setting an area from a keypad NOT 'IN' that area, 5-second 'quickset' exit mode will apply. This will NOT apply to setting of area B as part of a 'Full' system set if 'intelligent setting' is enabled.

If a Set Point programmed as 'IN' multiple areas is used, the highest priority programmed for those areas – 'Timed' lowest and 'PTS' highest – will apply. Any other areas being set will 'Quickset.' Exit volume level will always be the highest applicable to area(s) actually being set.

On entry, the system will allow the highest entry time applicable to areas to which the entry door is allocated.

On entry, correct cancellation of entry time will ONLY be possible if the areas the keypad used is 'located in' exactly matches the areas for which the entry route zones are valid.

D: OMITTING ZONES

Zones to be omitted must have the 'omittable' attribute selected. The omission may be done by:

(i) '24 hour tamper' 'day alarm,' and similar zone types may be omitted during an unset period from the Manager menu. Readmission may be done from the menu, or automatically when the relevant area is next set.

(ii) During setting procedure, press YES whilst 'Unable to Set' is displayed, or during the first 20 seconds of exit time, then enter the number of the zones to be omitted. If the 'LEAVE OPEN' option is selected (in 'SITE OPTIONS') a zone active at the time of setting will be omitted just by pressing 'YES' whilst it is displayed.

E: SILENT SETTING

This is NOT available as a user choice when setting the system. It can be arranged by careful use of the area exit tone volume levels. Settings 0 and 1 are both silent - setting 1 has audible 'chime' at end of exit time.

A Site Option is available for exit and entry tones to be generated by Keypad sounders only

F: EXIT MODES

'Timed' mode sets the system when the programmed exit time has expired, provided all zones on the exit route are clear. Any 'PTS' button fitted will be live also in this mode.

'Final Door' mode: the setting procedure will be completed when a zone programmed as 'Final Exit (FX)' is closed. This mode may also be used for 'lock set' operation: securing the lock completes setting procedure, unlocking starts entry time.

If the 'FX' zone is closed before the remainder of the exit route is clear, it will be 'stored' and acted on to complete the setting procedure only after the remainder of the exit route is clear.

'Timed/Door' mode: the setting will be completed when the exit time expires, OR when a 'Final Exit' zone is opened and closed - whichever occurs first (NOT DD243:2002 systems).

'PTS' mode will override the programmed exit time for the area in question, and will be endless.

Note: The PTS signal is NOT stored. If pressed before the exit route is clear, it will be ignored.

'Quickset' (5 seconds) is not programmable, but is applied automatically when an area is set from a Keypad located outside that area, and if intelligent setting.

'Fail to Set' procedure will apply if the setting procedure is not completed within a pre-set time – see 'SITE OPTIONS.'

'Intelligent Set' permits the system to automatically omit Area B when setting with a multiple area code including area 'B.' (See page 5-3)

Multiple Areas

If a Set Point programmed as 'IN' multiple areas is used, the highest priority exit mode programmed for those areas 'Timed' as lowest and 'PTS' as highest will apply. Any other areas being set will automatically 'Quickset.'

On entry, the system will allow the highest entry time applicable to areas to which the entry door is programmed.

NOTE: Care is required in setting up exit modes / volumes for 'common lobby' areas.

G: KEYSWITCH OPERATION

This is an alternative means of setting the system, using a key operated switch (or equivalent electronic means) to perform the setting procedure.

Two options are available:

Keyswitch Zone: When activated, the system will commence exit time in the normal way.

Blockschloss Zone: When activated, the system will set IMMEDIATELY, with NO Exit time. The switch used may be interlocked from the control (eg by a solenoid) to prevent it being set if a fault is present.

In both cases, returning the switch to the normal position will immediately UNSET the system.

a) KEYSWITCH INPUT

The switch should be wired as a ZONE INPUT (iD or EoL as required).

Programme the zone as 'Keyswitch' or 'Blockschloss' according to operation required, and allocate the zone to the area(s) required to be set / unset from the switch.

The default is for the switch to be active (ie setting system) when switch contacts are OPEN. If required to use this with switch contacts closed, select 'NORMALLY OPEN' attribute for the zone when programmed.

b) Exit mode

When a Keyswitch zone is in use, the exit mode, etc. are the same as would apply if an equivalent code were entered at Keypad address 00 (note the "IN" settings).

c) INTERLOCK OUTPUT

For Blockschloss operation, output configurations are available for 'Can Set All' (to interlock for setting the entire system) or for 'Can Set A' etc. (when setting an individual area) – see page 13-28.

It is NOT possible to provide a dedicated interlock output for combinations of areas (unless an external module is used to 'gate' two outputs together).

These outputs will be live to release the interlock, as long as ALL zones (or those relevant to the area being set) are clear, AND there are no technical faults present that are programmed to inhibit setting (see 'site options').

It is, of course, essential that the outputs used have sufficient current drive capability to power the solenoid.

H: UNSET ONLY INPUT

An 'Unset Only' input type is available to permit the system to be unset from (for example) an access control unit, without attempting to set again each time the unit is used.

I: FAIL TO SET

If the exit procedure is not correctly completed, a 'Fail to Set' warning may be used.

The time delay before this becomes operative may be programmed (see page 13-18).

At the end of this period, an alarm will be generated if the site option "Set Fail = Alarm" is selected (page 13-35). The 'alarm response' will be the relevant programmed option. Alternatively, an output may be programmed as "Set Fail" which can be used to initiate a dedicated signal to the Alarm Receiving Centre.

NOTE: The 'Set Fail' timer starts simultaneously with the exit timer, and should therefore be set longer.

J: SETTING WITH FAULTS

In the event of setting with a zone in active condition (except on exit route), the intermittent 'fault on exit' tone will sound and the display will show 'UNABLE TO SET' and scroll through the zone(s) preventing setting.

If 'omit' options are programmed (see page 5-4), this zone can be omitted to permit the setting procedure to continue. Alternatively, the fault must be cleared, and the setting procedure started again.

In the event of deviation from exit route during exit time, an alarm tone will sound.

The system is programmable to prevent it being set if any of a range of technical faults (eg Mains, Battery, Telecom Line, etc) is present - see 'SITE OPTIONS.'

K: SYSTEM CODES / TAGS

Codes (which can be 4-, 5- or 6-digit) or Tags may be programmed in the following ways:

USER	Set & Unset only	Programmable by Manager only *Default 1234*
MANAGER	Set & Unset, also access Manager menu.	Programmable by Manager only
MASTER MANAGER	Set & Unset, also access Manager menu. From software 3·1, cannot Set/Unset the system	Programmable by Manager and by Engineer *Default 2222*
DURESS	Set, also Unset with PA signal to ARC	Programmable by Engineer only
GUARD CODE Euro-44+ and above only	Set, also unset after alarm valid for a pre-set period	Programmable by Engineer only
ENGINEER	Test Set / Unset, also access to Engineer menu.	Programmable only by Engineer *Default 1111*

Additionally, codes / tags may be restricted to specific area(s), and to set only or unset only.

Tags may also be programmed for Access Control and Ward Control applications.

Mixing codes of different lengths is NOT recommended.

From Software 3·1, an option is available to restrict managers to programming TAGs only – not codes. (see page 13-36)

L: VALID CODE SILENCES ALARM

If the Site Option "Code Stops Sound" is selected as 'YES,' then entering ANY code valid on the system, at a Setting Point at which it is valid, will silence an alarm, regardless of which area the alarm originated in.

If the code is not valid for the area in which the alarm was generated, the system will silence, and a 'misoperation' signal will be generated (if programmed). The area in question will remain 'set.'

If the option is NOT set, such a code will silence the alarm only, if used at a keypad valid for the area in which the alarm has occurred, and at which it is itself valid. It will NOT trigger the 'misoperation' output.

M: DEVICE FAILURE

In the event of a keypad becoming severed from the rest of the system, a 'Device Alarm' will be triggered, identifying the device causing the alarm, and will apply to ALL areas that the keypad can set.

If any of these areas cannot be unset from a remaining keypad, they will remain set, and it will NOT be possible to access the Engineer or Manager menus, until the fault has been repaired.

The device will be identified by a 3-digit code:

The first digit identifies the device type:

1 = End Station
2 = Keypad
3 = Tag Reader
4 = Zone Expansion Module
5 = Output Module

The remaining digit(s) identify the individual address of the type, thus

Device 204 = Keypad addressed as 04, etc.

N: OTHER FAULT INDICATIONS

See Appendix A for full details of other fault messages, and suggested responses.

Chapter 6

INDICATIONS and TONES

This chapter explains the indications available to the user, and the options available for tailoring these.

a) Keypad Liquid Crystal Display

Displays all relevant system information. In factory default mode, entry of a code is required in order to view this. Options are available (see 6-2).

b) Setting Point LED Display

5 system LEDs are provided at each Keypad and Set/Unset Tag Reader. These are tailored to the requirements of EN.50131, as follows:

Power (Green)	Lit when AC (mains) power healthy Flashes when mains fault on any part of system
Alarm (Red)	Flashes when correct code entered after alarm is silenced (including by timer). Remains until reset performed
Tamper (Red)	Flashes when correct code entered after tamper alarm is silenced (including by timer). Remains until reset performed
Fault (Yellow)	Lit when a Technical fault is present, at a Setting Point where some valid areas are unset. Flashes during 'cannot set' period if a technical or zone fault is present
Unset (Green)	Lights at code entry if all areas assigned to code are unset (whether at setting or unsetting). Flashes if not all assigned areas are unset. Remains lit for minimum of 5, and maximum of 30 seconds dependent upon other system activity.

These may be adjusted to suit other standards requirements, as shown on page 6-3.

NOTE: At Set/Unset Tag Readers programmed as 'Ward Controllers' the display will be tailored to that function (see Chapter 16).

c) Area LEDs

The A B C D keys at DeLuxe Keypads contain Red LEDs, which illuminate at all relevant times to indicate the security levels or principal areas being set/unset or programmed.

d) Backlighting

LCDs and Keypad keys are backlit. The backlighting will illuminate at the start of entry and exit times, and at key (or tag) entry, and will remain lit for 30 seconds after the last key entry, or termination of the function.

NOTE: An option is available at each keypad to force the backlight to remain lit except in mains failure, see 12.3.

e) Fault Indications

Fault indications shown on the Liquid Crystal Display will include a numeric identification of the individual device at which the fault is present, eg

Mains Failure 401
Device Failure 214 etc.

The first digit identifies the device type:

1 = End Station
2 = Keypad
3 = Tag Reader
4 = Zone Expansion Module
5 = Output Module

The remaining digit(s) identify the individual device of the type, thus

Mains Failure 401 - identifies the Zone Expansion Module addressed as 01 etc.

For details of other fault indications, see Appendix A.

f) Engineer Reset

If the system indicates 'Engineer Reset Required' (see 'Site Options'), this must be performed before the area(s) on the system to which it applies can be used again. The reset may be performed:

a) By entering the engineer code. The system will not enter the engineer mode, but will reset.

b) By entering the special reset code derived from the displayed 'anticode,' by means of the Castle 'Remote Reset Code' programme.

c) By the 'RedCare Reset' line being activated via a 'STU'

d) By 'Download Reset' from a PC running Euro-InSite software.

The system will log the reset, however initiated.

The entire system must be unset before an Engineer Reset may be performed.

Note: by default, engineer reset of Intruder alarms will be invoked when an intruder/confirmation signal is triggered after the system is set. If 'secure intruder' signals are used (which signal also during exit time), a Site Option is available to invoke Engineer Reset in this mode also.

g) Display Options

(i) Customise Text Strings

The 'area setting' text strings can be programmed to make the display meaningful to the user. Additionally, the 'sign-on message' can be customised.

(ii) Display characteristics

The system can be tailored to display certain information without requiring a code entry:

Display when set	Enables the system to display the status of the areas whilst set.
Display Active Alarms	Displays alarm information immediately, without having to silence first
Display PA Alarms	Displays PA Alarm information immediately, without having to cancel the alarm first.
Display Faults	Permits system fault indications to be displayed whilst the system is unset / partially set, without requiring code entry.
Display zones	Displays current status of all active zones whilst system is unset.
Display omits	At unset displays all zones omitted during the preceding 'set' period for 15 seconds.

h) System Tones

Separately identifiable tones are generated for each of the following system condition:

- Chime
- Exit
- Exit Fault
- Entry
- Technical Fault
- Tamper Alarm
- Intruder Alarm
- PA /Duress /Hold Up Alarm (where not 'silent')
- Fire Alarm

i) Area Sounders

The End Station loudspeaker output responds to ALL system functions, and is NOT programmable.

Keypads and Tag Readers have integral sounders that respond ONLY to sounds relevant to the areas for which they are programmed.

TMZ modules have an output (No. 2) allocated as a sounder output, capable of driving a loudspeaker, which responds to stimuli only for the areas for which it is programmed (programmes as a Tag Reader).

THIS PAGE LEFT BLANK FOR NOTES

Chapter 7

PARTITIONING THE SYSTEM

This chapter identifies the alternative methods of sub-dividing the system for operating convenience.

Please refer also to the BSIA "Guidelines for Intruder Alarm Systems Incorporating Split Systems."

A: SECURITY PATTERNS

a) LEVEL SETTING

(Euro-10, 12, 22 and 28, also option on Euro-44+)

The user may set security level A or B or C or D. Each level will provide a different pattern of coverage, determined by the programming of the zones.

For example, the front door may need to be active in all setting scenarios, so would be programmed to levels A, B, C **and** D. On the other hand, the master bedroom may need to be active only if ALL of the system is set, and would therefore be allocated to level 'A' only. The kitchen may need to be omitted when the dog is left at home and at night, and would thus be programmed to 'A' and 'C' – etc.

b) AREA SETTING

(Euro-134 and 256, also default option on Euro-44+)

The user has the option of setting any combination of independent areas, and of 'adding to' or 'subtracting from' the list of areas set at any time.

Euro-44+ has four such areas, Euro-134 eight and Euro-256 fourteen.

Areas may be operated independently and simultaneously at different setting points.

Software 3·00: If a code is entered whilst some areas are set, the default response will be to SET remaining areas for which the code is valid, UNLESS entry time has started, when the response will be to UNSET relevant areas. This response will be modified by the use of 'flexi-set' codes.

Software 3·1: If a code is entered whilst some areas are Set, the default response will be to UNSET those areas for which the code is valid, leaving remaining areas Set. This is not affected by the 'flexi-set' attribute.

If multiple areas are set simultaneously, the system will use the highest mode / time / volume for which the setting keypad is 'IN.' Other areas will 'quickset.'

When entry time is started, the longest time / highest volume

relevant to areas for which the entry route is valid will apply.

c) Wards and Shunts

Additional partitions may be set up as subdivisions of areas (or levels) by the use of WARDS or SHUNTS. For details, refer to chapter 16.

B: ZONES 'ANY or 'ALL'

When AREA SETTING is in use. As a general rule, zones should be programmed to a single area. However, there are applications requiring zones to be allocated to more than one area. This may be done as:

'ANY:' The zone will be live if ANY of the areas to which it is allocated are set; eg in a domestic situation a garage may be programmed to 'AB Any' and be live if either Downstairs (A) or Upstairs (B) is set; or

'ALL:' The zone(s) will be live only if ALL the allocated areas are set. Thus a 'common lobby' can be programmed that will set automatically with the last of the allocated areas, and unset with the first, regardless of the order in which this is done. Any number of such common areas may be established on a system, BUT no area may be used in more than one common lobby that is part of an entry/exit route.

NOTE: Care should be taken when setting up exit modes and volumes for a common lobby area (see 5-4).

C: Keyswitch Control

All systems can have areas (or levels) programmed for Keyswitch operation.

This may be with conventional exit time in use or instant setting for 'Blockschloss' applications.

Zone inputs are used to accept an input from a Key- (or other) switch to set / unset the system.

For further information, refer page 5-6

D: Area Sounders

The End Station loudspeaker output responds to ALL system functions, and is NOT programmable.

Note: selection of the site option "E/E Keypads Only" will prevent the system loudspeaker from repeating these tones.

Keypads and Tag Readers have integral sounders that respond ONLY to sounds relevant to the area(s) that they are programmed as 'IN.'

Alarm signals for individual areas may be programmed (as 'area siren') to any output, to drive DC powered sounders.

TMZ modules have an output (No. 2) allocated as a sounder output, capable of driving a loudspeaker, which responds to stimuli only for the areas for which it is programmed as 'IN' (programmes as a Tag Reader).

Chapter 8

EMERGENCY ALARMS

This chapter discusses the facilities included in Euro-MERiDIAN for emergency situations.

NOTE: Emergency zone types are NOT active whilst the system is in engineer mode.

A: PERSONAL ATTACK/ DURESS ALARMS

Facilities for Personal Attack alarms are:

1	Deliberately operated device wired into zone programmed as 'PA':	Full audible alarm, and communicator 'Hold Up' and 'Zone PA' signals to Alarm Receiving Centre
2	Deliberately operated device wired into zone programmed as 'Silent PA':	Silent communicator 'Hold Up' and 'Zone PA' signals to Alarm Receiving Centre
3	Use of a 'Duress' code (programmable only by engineer).	Silent communicator 'Hold Up' and 'Duress' signals to Alarm Receiving Centre whilst unsetting system.
4	2-Key PA from Keypad (keys 1 and 7)	Default is audible alarm only. Options are available for communicator 'Hold Up' and 'Duress' signals, and for 'silent' operation. **NOTE: This function must be enabled in 'Site Options.'**

NOTE: please ensure that communicator signals are selected carefully:

'ZONE PA'	triggers ONLY for an alarm generated from a PA ZONE
'Duress'	triggers ONLY for an alarm generated at a keypad
'Hold Up'	triggers for alarms generated by a zone OR at a keypad

B: FIRE ALARMS

The system can accept Fire detectors directly into zones programmed accordingly or, alternatively, a trigger from a dedicated Fire Alarm system. This will initiate a Full audible alarm (sounds differentiated from standard sounds) and a communicator 'Fire' output.

A separate timer is provided for a 'Fire' alarm output, with the option of 'indefinite' operation if required for fire regulations.

Note: When selecting and siting fire detectors, the same criteria must be applied as for a full BS5839 Fire Alarm system.

If a 'silent' trigger from a dedicated fire Alarm system to the ARC is required, use a 'follow zone' output, triggered by a 'switcher' zone rather than a 'fire' zone.

C: GAS ALARMS

The system can accept Gas detectors into zones programmed accordingly. This will initiate a Full audible alarm (sounds differentiated from standard alarm sounds) and a communicator 'Gas' output.

D: MIMIC DISPLAYS

A customised mimic display may be driven from suitably programmed Output Modules.

E: CALL SYSTEMS

A call system may be arranged using 'switcher' zone types and 'follow zone' outputs, with call and reset facilities, and mimic displays available.

Chapter 9

REMOTE SIGNALLING

This chapter summarises the options available for remote signalling from the system and details the facilities available for compliance with DD243:2002.

A: ARC Signalling Using the Slot-in Digi-Modem

The digicom may be used independently of the modem function. A variety of formats are available, including standard 'fast' and 'extended' formats, which are fully programmable.

Installation information is shown at Chapter 20, with programming information in Chapter 21.

The Slot-in Digi-modem can also be used for Downloading purposes, in conjunction with a PC running 'In-Site' software. (see Chapter 22) and SMS Text Message transmission (see Chapter 23)

B: Using a STU / Dual path signalling

An industry standard plug-on STU or communicator may be fitted to the Euro-44+ (or 134, 256) End Station. Up to 10 channels are available, and are fully programmable under 'Program outputs' section. Three monitoring inputs are provided (Fail to Communicate, Tellback/RedCare Reset and Line Fault), which are enabled in 'Site Options.'

Euro-22 and 28 are fitted with a connector for a loom (Cat. No. CT1105) to a stand-alone STU or digicom. 6 fully programmable output channels are available, along with two inputs (Line Fault and RedCare Reset).

Please check for availability of adaptor to provide a comparable connector on Euro-10 and 12.

Outputs from the End Station default to +5v when active; so the communicator should be programmed for '+ve applied.' Software 3·1 (& later) has invert option for 'positive removed' signalling. See page 13-35.
Inputs also require +5v signals to trigger.

NOTE: Connector pins on Output Modules will also accept a STU or communicator, but inputs from the device are NOT (yet) monitored.

C: AREA SIGNALLING

'Set/Unset' 'Intruder' 'Hold Up' 'PA' and 'Confirmation' signals are available for each area individually.

D: FUNCTIONALITY

The following functionality should be noted:

PA etc SIGNALLING

'Zone PA'	triggers ONLY for an alarm generated from a PA ZONE
'Duress'	triggers ONLY for an alarm generated at a keypad
'Hold Up'	triggers for alarms generated by a zone OR at a keypad

Please ensure that communicator signals are selected carefully - see page 8-1.

Alarm Responses

The alarm response may be programmed individually for each area (and for 'Fire' and 'Day' alarms). This may be done on a 'graduated' basis – eg system warnings may start at keypad bleepers only, and progress through internal sounders to external sounders (15 seconds at each level). This response may be programmed to 'upgrade' to start at digi response if additional areas are set, and again to confirmed response if all areas are set.

Entry Pre-Alarm Timer

Introduces a programmable delay before triggering of the 'intruder' signal, if the alarm is generated after entry time has started.

NOTE: For correct operation to comply with the requirements of DD243:2002, this should be set to 30 seconds or equal to entry time if shorter.

Siren Delay

This may be programmed to suit appropriate requirements.

The delay will apply to any alarm generating an 'intruder' communicator signal, but will NOT be valid:

A: Within 3 minutes of setting the system

B: After entry time has started.

A separate 'Silent First Alarm' option is available when confirmation signalling is used.

Rearm

When the "Siren" Time expires, the system will silence. Re-arm (re-instatement) will NOT take place until expiration of the "confirmation" timer. Re-arm may be programmed between 0 (never) and 9 (always).

At rearm, any zone in fault will be omitted, and a 'zone isolated at rearm' signal generated. The zone will be reintroduced should it subsequently close, unless 'Re-

arm Isolates' (in 'SITE OPTIONS') is selected, in which case the zone will remain isolated until manually reset (unless it is a 'Final Exit' zone).

Misoperation (Abort) Signalling

May be signalled:

A: By dedicated 'Misoperation' signal

B: By generation of the 'unset' signal

All these options will be signalled (if programmed) when a valid user code is entered after the generation of the 'intruder' signal. There is no time limit on this.

Note that 'intruder' signal will restore if the system is reinstated after an unconfirmed alarm.

'Misoperation' can optionally be signalled when silencing an alarm at a 'Ward Controller.'

Engineer Reset

Separately programmable for 'PA' 'Intruder,' 'Confirmed' and 'Tamper' alarms, also for 'soak' zones triggering falsely. If programmed, this becomes valid immediately the appropriate alarm output has been generated.

NOTE: If audio or visual confirmation systems are in use, 'engineer reset at confirmation' will apply only when sequential confirmation is valid.

Reset may be performed:

A: By use of the Engineer code (even if another area remains set)

B: By use of the 'Red Care' reset facility (see below).

C: By use of a remote reset code generated at the ARC from an 'anticode' generated by the system.

D: By 'download from Euro-InSite software.

Engineer Reset of Intruder may be selected as operative when using standard 'Intruder' output signalling, or for 'Secure Intruder' signalling.

Digi Reply Signal

An input is available through the 'STU connections' to accept an input signal from the Alarm Receiving Centre.

This may be programmed (in 'SITE OPTIONS') as:

'None' when not to be used.

'Fail to Communicate' for use with a digital communicator (to log the failure to receive acknowledgement of the signal from ARC).

'Red Care Reset' to accept an 'Engineer Reset' signal from the ARC.

'Relay' provides monitoring of the 'plug-on' relay interface (non-UK use).

NOTE: If 'None' or 'Relay' is selected, monitoring of the inputs will NOT be active.

E: SEQUENTIAL CONFIRMATION SIGNALLING

DD243:2002 Compliance

All Euro-MERiDIAN models include necessary functionality for systems to comply with the requirements of DD243:2002. They have been tested to the "BSIA Manufacturers Check List for Compliance of CIE with Requirements of DD243:2002."

A number of additional options are provided to enhance system performance.

SEQUENTIAL CONFIRMATION SIGNALLING FROM PARTITIONED SYSTEMS

The system may be programmed to respond

A: To events within a dedicated area only ('Confirmed Area' signal)

B: To any event on the system ('Confirmed Any' signal)

NOTES:

1. It is important for correct operation that the pre-alarm timer is set to at least 30 seconds (but not longer than the standard entry time).

2. Sequential confirmation may also be signalled by use of an extended signalling format.

GENERAL:

Sequential Confirmation applies to all zone types that generate an “intruder” response when the system is set, ie:

- INTRUDER
- TAMPER (including SAB/System tamper, but NOT Code-guessing)
- ENTRY ROUTE (other than 'final exit' - if tripped without entry time started)
- ENTRY SHOCK (see page 9-8)
- DAY ALARM

- and to tamper alarms from those zone types.

Tamper response of zone types that do NOT form part of the intruder system (ie Fire, Switcher, etc. types) do NOT generate an intruder response OR count towards 'Confirmation.'

NOTE: Whilst an 'intruder' alarm signal will be generated in the event of entry time expiring after a FINAL EXIT zone is tripped, such zones are NOT permitted to count towards a confirmed alarm. A sequentially confirmed alarm can ONLY be signalled for triggers of two zones of the types listed above.

OPERATION:

a) Normal operation

The first zone to alarm will cause an ‘intruder’ signal to be sent to the ARC, which should be interpreted as ‘unconfirmed alarm.’

A second zone going into alarm prior to the end of ‘confirmation time’ will be signalled as ‘confirmed’ for notification to the police.

A repeat trigger of the first zone will be ignored.

If the ‘confirmed’ signal has NOT been generated by the end of ‘confirmation time’ the system will reset and (subject to setting of ‘rearm count’ in programmable options – timers section) rearm (re-instate). The ‘intruder’ signal WILL restore (along with 'tamper' or 'entry deviation' outputs if these have been triggered).

In the event of a further trigger before the system is unset, a fresh 'intruder' alarm will be generated. Subsequent triggering of an additional zone (within the new ‘confirmation time’) will result in the ‘confirmation’ signal being sent.

b) Entry Route Operation:

Applicable only if the means of entry selected permits sequential confirmation to remain available (page 9-8):

If entry time has started before an alarm occurs, no confirmation will be signalled until TWO zones off the entry route have been triggered AFTER expiration of entry time (including pre-alarm time).

If entry through the entry route follows an 'intruder' alarm being generated, entry time will commence, and only one zone will need to be triggered after expiration of the timer.

If a ‘final exit’ zone remains open when the ‘confirmation time’ expires and the system resets, it will automatically be omitted. All ‘entry route’ zones (including ER/FX and FX/ER) sharing exactly the same area configuration as the FX zone will be treated as FX zones and will start entry time, not generate an alarm.

At rearm, any zone in fault will be omitted, and a 'zone isolated at rearm' signal generated. The zone will be reintroduced should it subsequently close, unless ‘Re-arm Isolates’ (in ‘SITE OPTIONS’) is selected, in which case the zone will remain isolated until manually reset (unless it is a ‘Final Exit’ zone).

COMPLIANCE WITH SPECIFIC REQUIREMENTS

a) Basic Operation

Normal operation of a "Sequentially Confirmed" system requires the following signals to be sent to the ARC:

Intruder (03)	at first alarm
Confirmation (06)	at second valid alarm
Zone omit at Rearm (17)	in the event of a zone being omitted at Reinstatement of the system at the end of confirmation time
Set/Unset (04) OR	When system sets / unsets
Misoperation (05)	When system manually unset following an alarm.

These output configurations are programmable as required (see 13-27).

These are available on a system-wide ("ANY") - type number references as above -or per area ("AREA") as required.

Local responses of the system should be set up in the "Alarm responses menu, see page 13-25.

Note particularly the following option available:

'Silent First Alarm:'
all sounder and siren outputs remain silent until an alarm is confirmed. This could be used for an audio-confirmed system for example, if the audio confirmation equipment did not include the facility to interrupt these outputs.

If such a situation, feedback from that equipment would be required to simulate a "sequentially" confirmed alarm in order to trigger the panel sounders and sirens.

Additionally, the following TIMERS are required (page 13-17):

"Pre-Alarm" Time should be set to 30 seconds (or equal to entry time if shorter) for correct operation.

"Confirmation" Time should be set as required, noting that DD243:2002 specifies between 30 and 60 minutes.

NOTE: DD243:2002 permits the "Confirmation" timer to be re-started in the event of a second trigger of the 'first detector' during confirmation time. This option is **NOT** available on the Euro-MERiDIAN range.

b) Means of Completion of Setting

DD243:2002 permits a variety of methods. These should be considered carefully and compared to the permitted 'means of unsetting' to select the most suitable combination.

For details of zone programming, refer page 13-6; Timers page 13-17; Exit modes page 13-19.

ALL permitted options can be used with Euro-MERiDIAN.

(i) Key Operated Shunt Lock fitted to final exit door:

Wire suitable lock to zone programmed as "Final exit." Programme exit mode as "Final Door." Door contact fitted to door should be programmed as "Entry Route" zone type.

(ii) Push Button switch mounted outside the protected premises:

Wire suitable button as zone programmed as "PTS" and programme exit mode as "PTS"

(iii) Protective switch (ie door contact) fitted to the final exit door:

Wire the door contact to a zone programmed as "Final Exit" and programme exit mode as "Final Door."

(iv) Use of Portable ACE

This requires the use of a tag (or equivalent) whilst OUTSIDE the premises to perform the 'PTS' operation. A suitable device may be wired as a 'PTS' zone, as option (ii).
There is currently no suitable device within the Euro-MERiDIAN range.

(v) In conjunction with ARC:

This may be carried out using 'downloading' features of the system by an ARC running 'Euro-InSite' software.

(vi) Other compliant methods if installed to requirements of EN50131:

Possible methods include use of key operated or electronic lock wired to system as 'Keyswitch' or 'Blockschloss' zone (see page 5-9).

c) Means of Unsetting

A variety of methods are permitted, which may be achieved as under:

(i) Unlocking initial entry door unsets the IAS:

Lock contacts should be wired to "Unset" zone.

Note this cannot be combined with "completion of setting by key operated shunt lock on final exit door" using the same switch contacts.

(ii) Unlocking initial entry door disables all means of confirmation:

Wire lock contacts as "Final Exit" zone with programming option "Disable confirmation on entry" selected (see page 13-25).

Note: This readily combines with "completion of setting by means of key operated shunt lock on final exit door."

(iii) Opening Initial entry door disables all means of confirmation:

Contact on door wired as 'FX' zone with programming option "Disable confirmation on entry" selected (see page 13-25).

(iv) Completion of entry using portable ACE:

Entry time must be started by contact (FX) on initial entry door and unsetting carried out by use of TAG at Keypad or Tag Reader.

NOTE:

Euro-MERiDIAN proximity tags, used with a Keypad or Reader meet all requirements for a "Portable ACE" as defined in DD243:2002.

(v) Unsetting in Conjunction with ARC:

This may be carried out using 'downloading' features of the system by an ARC running 'Euro-InSite' software.

d) Indications to user

DD243:2002 requires a time-limited indication to the user that the system is set / unset. This is made available by the cessation of exit / entry tones as appropriate.

Additionally, a visual "unset" indication is provided at the Keypad / Tag Reader used to unset the system, live during exit time and for a short period when the system is unset.

An 'Alarm Now Confirmed' indication for a keyholder attending site (suggested option, not mandatory) may be obtained by programming an output programmed as 'confirmed' to drive an indicator or the system Strobe.

e) Additional Facilities

Additional facilities are available for use in conjunction with Sequential Confirmation signalling, as follows:

(i) 'Entry Shock' zone type:

Patent applied for.

This zone type is always used in conjunction with a 'Final Exit' zone. The 'FX' zone is a door contact on the initial entry door, and the 'Entry Shock' zone is a non-latching shock sensor fitted to the door frame in the vicinity of the lock.

If the initial entry door is subject to gross attack and forced open, then at the expiry of entry time only one further intruder zone needs to be tripped to signal a sequentially confirmed alarm - counting the 'Entry Shock' zone as the first to alarm..

Triggering the Entry Shock zone in isolation will NOT generate an alarm of any kind. The Final Exit door contact must be opened within 10 seconds of the shock detector triggering for the Entry Shock response to apply.

This configuration thus provides enhanced protection for forced entry via the entry route as an alternative to the 'shunt lock' option.

CAUTION:

The 'Entry Shock' function should only be used after careful risk assessment. It is essential that the shock detector is properly adjusted, and that the door construction / fittings are adequate for the purpose.

(ii) 'Confirm Group' zone attribute

Applying this attribute to any zone will prevent a zone from confirming an alarm triggered by another zone within the same group.

Thus if a number of detectors are in use that could respond to the same stimulus (eg multiple shock or pressure wave detectors), these may be wired individually to the control to avoid the need for complex 'series' wiring.

NOTE: Default allocation "00" means that zone is NOT allocated to a group.

Zones allocated to Group "99" will trigger a first (unconfirmed) alarm in the normal way, but will NEVER trigger a 'confirmed' signal, regardless of which group the 'first alarm' zone is allocated to.

THIS PAGE LEFT BLANK FOR NOTES

Chapter 10

INSTALLATION

This chapter describes the recommended procedure for installing Euro-MERiDIAN.

A: ELECTROMAGNETIC COMPATIBILITY (EMC)

Euro-MERIDIAN has been designed to meet, or exceed, all relevant EMC requirements.

This alone does NOT guarantee that no problems will be experienced, especially in relation to older equipment not designed to the same standards, or to equipment for which the same provisions of the EMC Directive do not apply.

To maintain full EMC performance for the system, it is essential that the following points be followed:

(i) All other equipment used must carry the CE mark for electromagnetic compatibility.

(ii) Do not locate any component of a Euro-MERiDIAN system close to equipment switching high frequencies, or using radio frequencies in its operation.

(iii) Avoid using mains supplies contaminated by interference generated by switching, arcing, etc.

(iv) The system MUST be connected to a good, clean, earth.
The connection of lids of steel housings to mains earth is a mandatory safety requirement.

(v) The correct cable type should be used for each application, as specified (see page 11-2).

(vi) Cables should be routed to avoid the possibility of interference being picked up from other nearby cabling or equipment. Be alert to the possibility of other cables or equipment being installed after the alarm system has been commissioned.

For further information refer to BSIA “EMC Guidelines for Alarm Installers.”

B: MOUNTING THE EQUIPMENT

Mount the equipment carefully in suitable locations, noting particularly the following points:

(i) Zone Expander Units (ZEMs or TMZs) should be located to suit the wiring to appropriate detectors. More than two units should NOT be mounted together.

(ii) Where Zone Expanders, Output Modules or Access Controllers are mounted on power supplies, all necessary connections are automatically made to draw all current from the power supply, and to use the system diagnostic capabilities to control the power supply.

(iii) Intelligent Power Supplies cannot be used in isolation from the Euro-MERiDIAN system plug-on pcbs.

(iv) Keypads and Set/Unset Tag Readers should NOT be mounted on, or near a metal surface, or within a metre of each other, or tag response could be affected.

(v) Where provided, metal housings must have the earth strap connected to the lid to meet electrical safety regulations.

(vi) When used in iD mode, Zone Expanders should NOT be located more than 10 metres from the power supply it is powered from.

C: TAMPER SWITCHES

To suit different housing requirements, tamper switches may be either

Printed Circuit Board mounted, using an arm or spring to bear on the lid, or screw on the backplate to bear on the switch

Or Secured to the housing, and connected to the PCB by a loom plugged onto a suitable header.

Some products have the facility to be used with either type.

Tamper switches should be adjusted so that they are correctly closed when the housings are secured.

Where a back-tamper facility is fitted, a No. 6 round-head screw should be inserted as a locating hanger, but not screwed home. Instead it should be left to provide a surface for the switch linkage to bear onto, thus:

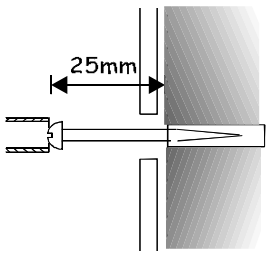

C: MAINS CONNECTION

MAINS ELECTRICITY IS DANGEROUS

MAINS connection must be performed by a qualified electrician, in accordance with Electrical Wiring regulations (BS.7671).

The Earth connection MUST be correctly made to the centre terminal of the mains terminal block, and to terminal G1 of the End Station, and of any Intelligent Power Supplies.

Metal lids MUST be correctly connected to mains earth by the wiring loom provided, before securing in position.

NOTE: The PCB ground connection is NOT a safety earth connection, but is for EMC filtering purposes.

WARNING: Always isolate the mains supply before removing the cover and working on the equipment.

D: SYSTEM CONNECTIONS

NEVER

add equipment to the system with power applied.

Damage could result!

Please refer to the following diagrams to identify the functions of all terminals on Euro-MERiDIAN components. Note that all components use the same identification for equivalent applications – eg D1,2,3,4 will ALWAYS be the RS-485 terminations, etc.

E: DIGI-MODEM

Information for installing the Euro-COM 9600 Digi-modem is shown separately at Chapter 20.

F: ACCESS CONTROL and GUARD TOUR EQUIPMENT

Information for installing Access Control and Guard Tour equipment (Euro-44+ and above only) is shown separately in Chapters 18 and 19.

G: POWER-UP INITIALISATION

Pre Power-Up Checks

Prior to powering up the system, a final check should be made of:

1. POWER SUPPLIES – adequate for the load to be applied.
2. WIRING – conforms to specifications in this manual (see 4-4, 11-2).
3. CONNECTIONS – correctly made, with no loose 'whiskers,' etc.

When you are satisfied that all is correct:

Powering Up

Power up the End Station on MAINS ONLY.

Go to the first keypad, which will be showing

```
ADDRESS
            [ -  - ]
```

Key 0 0 and A

```
Euro-MERiDIAN
Time:      00:05
```

The system will be generating a tamper alarm, use default code (1 2 3 4) to silence. When 'Battery Fault' is indicated (*NOT BEFORE*), the back-up battery should be connected.

Additional keypads on the system must also be addressed in the same way, ensuring that no address duplicates another Keypad, Tag Reader or Access Control Point.

When this has been done, any additional power supplies may be powered up – noting the same need to await a 'Battery Fault' indication before connecting the back-up battery.

NOTES:

A blank keypad display may mean that it has previously been coded to an address other than 00 (eg for test purposes). Press the 'D' key for 10 seconds to access the menu to enter the correct address as above. When prompted to enter a code, this is '2 0 0 0.'

Additional keypads, and any tag readers on the system will NOT work unless they are correctly addressed, AND enabled in the engineer menu, as shown on page 12-3.

Voltage Measurements:

Please note that on initial power up, at mains restore, and on exit from engineering, the PSU voltage will initially vary according to the state of battery charge. Measurements at these times may therefore be misleading.

H: THE PRINTED CIRCUIT BOARD LAYOUTS

(i) THE Euro-10 END STATION

AVAILABILITY TO BE ANNOUNCED

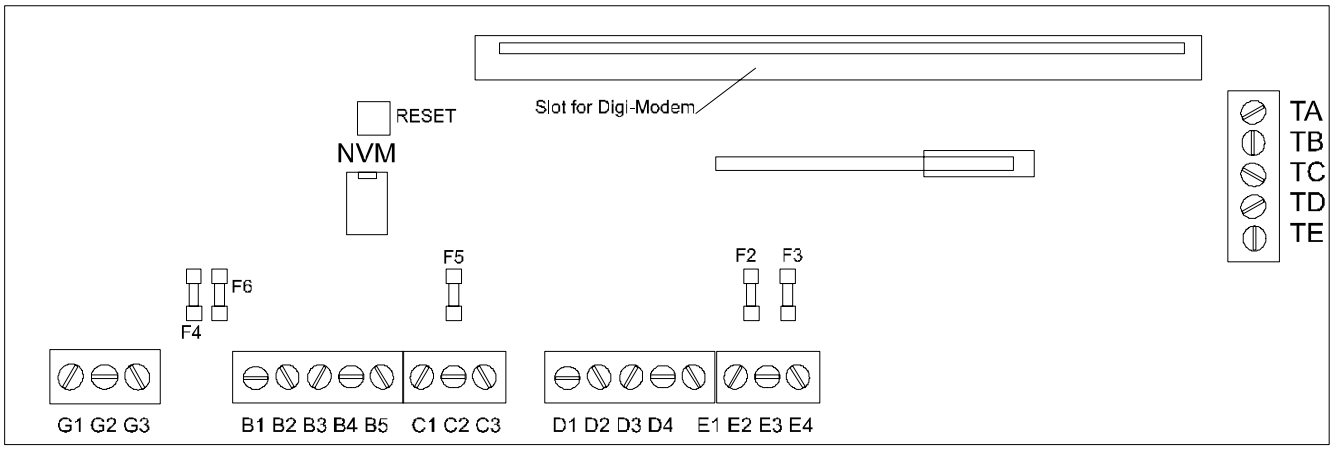

Terminal Allocations:

G AC input
- 1 Mains earth
- 2-3 Transformer

B SAB:
- 1 O/p 2 –
- 2 O/p 1 –
- 3 Tamp Ret
- 4 HO –
- 5 HO +

C Outputs:
- 1 Speaker –
- 2 +12v
- 3 O/p 3 –

D RS.485
- 1 0v
- 2 +12v
- 3 'A'
- 4 'B'

E iD bus
- 1 0v
- 2 +12v
- 3 iD Line –
- 4 iD Line +

Fuse Allocations:

F2: +12v at terminals D 800mA
F3: +12v at terminals E 800mA
F4: 0v BATTERY 1.5 Amp
F5: +12v at terminals C 800mA
F6: +12v at terminals B 800mA

(ii) The Euro-12 END STATION

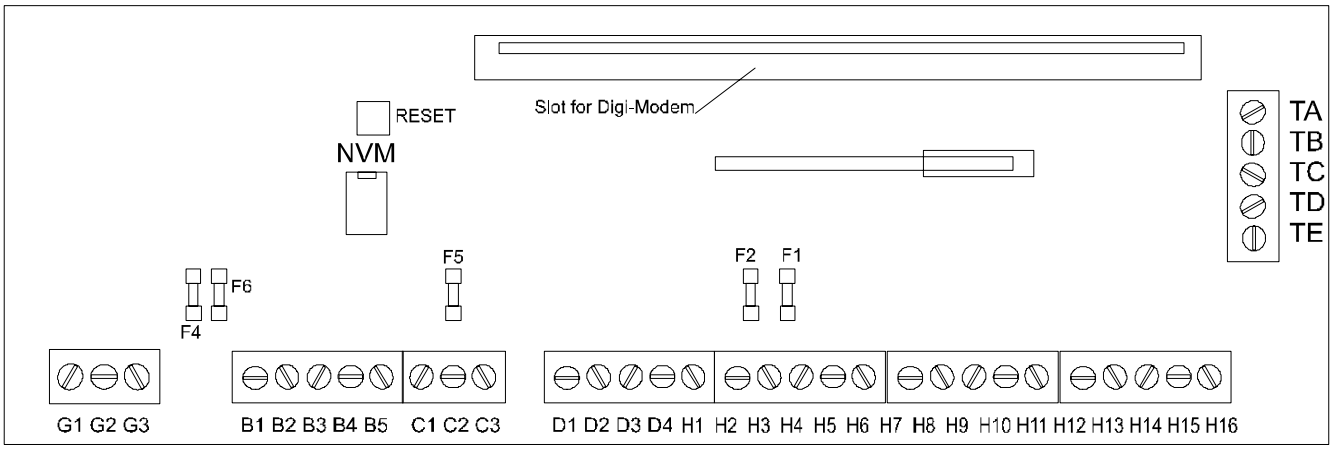

Terminal Allocations:

G AC input
- 1 Mains earth
- 2-3 Transformer

B SAB:
- 1 O/p 2 –
- 2 O/p 1 –
- 3 Tamp Ret
- 4 HO –
- 5 HO +

C Outputs:
- 1 Speaker –
- 2 +12v
- 3 O/p 3 –

D RS.485
- 1 0v
- 2 +12v
- 3 'A'
- 4 'B'

T Telecoms see p.20-4

H EoL Zones
- 1 Zone 1
- 2 Common
- 3 Zone 2
- 6 Zone 3
- 7 Common
- 8 Zone 4
- 11 Zone 5
- 12 Common
- 13 Zone 6
- 14 Zone 7
- 15 Common
- 16 Zone 8
- 4,9 0v
- 5,10 +12v

Fuse Allocations:

F1: +12v at terminals H 800mA
F2: +12v at terminals D 800mA
F4: 0v BATTERY 1.5 Amp
F5: +12v at terminals C 800mA
F6: +12v at terminals B 800mA

(iii) The Euro-22 and 28 END STATION

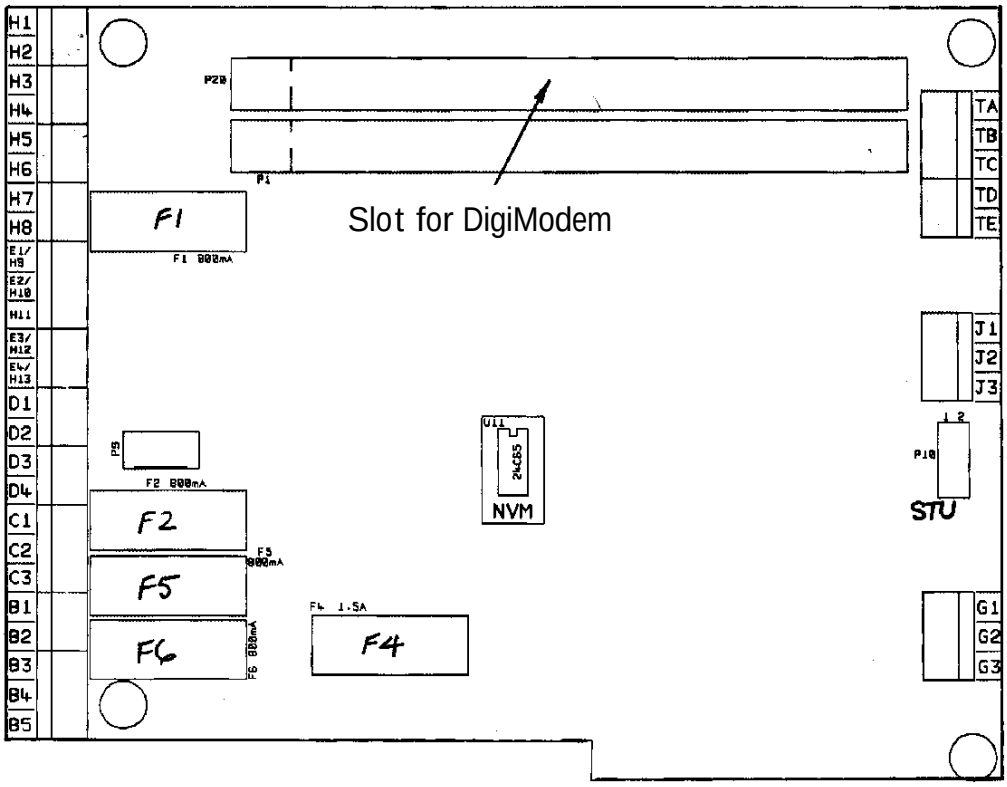

Terminal Allocations:

G AC input
- 1 Mains earth
- 2-3 Transformer

B SAB:
- 1 O/p 2 –
- 2 O/p 1 –
- 3 Tamp Ret
- 4 HO –
- 5 HO +

C Outputs:
- 1 Speaker –
- 2 +12v
- 3 O/p 3 –

D RS.485
- 1 0v
- 2 +12v
- 3 'A'
- 4 'B'

E iD bus (**Euro-28 only**)
- 1 0v
- 2 +12v
- (H11 is NOT used)
- 3 Line –
- 4 Line +

J Not used

H EoL Zones (**Euro-22 only**)
- 1 Zone 1
- 2 Common
- 3 Zone 2
- 6 Zone 3
- 7 Common
- 8 Zone 4
- 11 Zone 5
- 12 Common
- 13 Zone 6
- 4,9 0v
- 5,10 +12v

T Telecoms see p.20-4

Fuse Allocations:

F1: +12v at terminals E/H 800mA
F2: +12v at terminals D 800mA
F4: 0v BATTERY 1.5 Amp
F5: +12v at terminals C 800mA
F6: +12v at terminals B 800mA

(iv) THE Euro-44+ END STATION

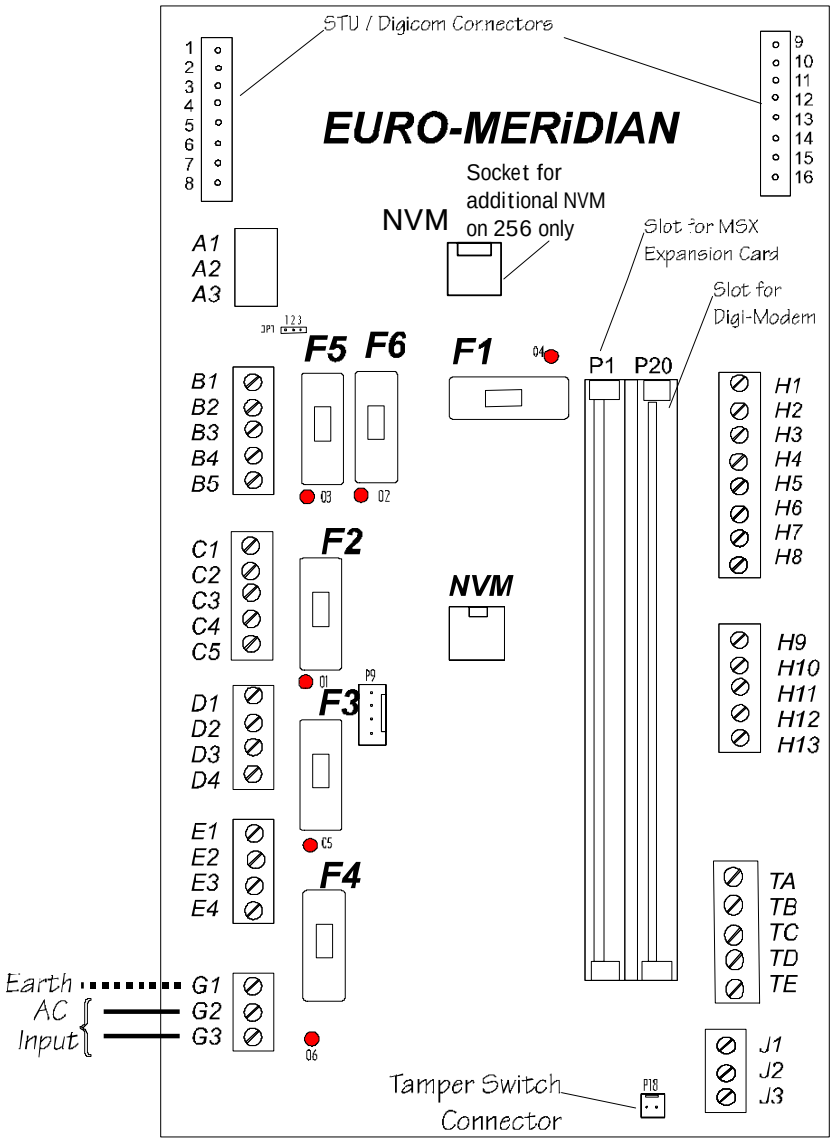

Fuse Allocations:

F1: +12v at terminals H 800mA (O4)
F2: +12v at terminals D 800mA (O1)
F3: +12v at terminals E 800mA (O5)
F4: +12v BATTERY 3.15 Amp (O6)
F5: +12v at terminals C 800mA (O3)
F6: +12v at terminals B 800mA (O2)

Indications:

'LEDs pulsing' indicates communications normal
Flashing at even on/off rate indicates fuse overload
Steady indicates fuse blown

Terminal Allocations:

A Relay (see p.13-33)
- 1 C contact
- 2 NC contact
- 3 NO contact

B SAB:
- 1 O/p 2 –
- 2 O/p 1 –
- 3 Tamp Ret (–)
- 4 HO –
- 5 HO +

C Outputs:
- 1 Speaker –
- 2 +12v
- 3 O/p 3 –
- 4 0v
- 5 O/p 4 +

D RS.485
- 1 0v
- 2 +12v
- 3 'A'
- 4 'B'

E iD bus
- 1 0v
- 2 +12v
- 3 Line –
- 4 Line +

G AC Input

H EoL Zones
- 1 Zone 1
- 2 Common
- 3 Zone 2
- 6 Zone 3
- 7 Common
- 8 Zone 4
- 11 Zone 5
- 12 Common
- 13 Zone 6
- 4,9 0v
- 5,10 +12v

J Reserved

T Telecoms – see p.20-4

(v) KEYPADS

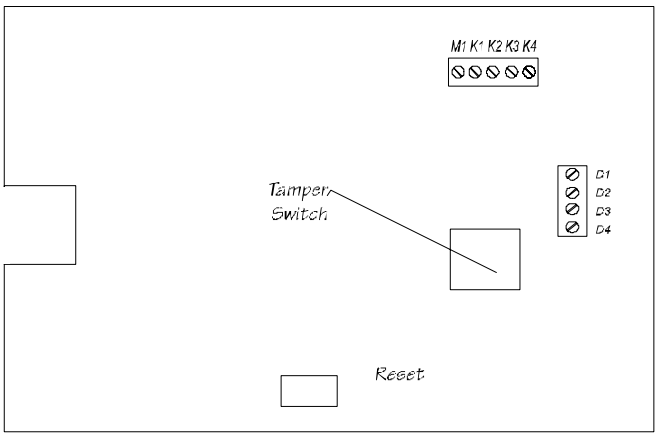

Note: Keypad addressing is performed as a software function whilst programming – there are no address coding switches.

Terminal Allocations:

D RS.485
- 1 0v
- 2 +12v
- 3 'A'
- 4 'B'

K EOL Zones
- 1 0v
- 2 +12v
- 3 Zone 1
- 4 Zone 2

M Output
- 1 Output 1 –

NOTE: Deluxe Keypad shown. Standard Keypad has no zone or output terminals.

Zones are available only at nominated Addresses – see page 4-5

(vi) SET/UNSET TAG READERS

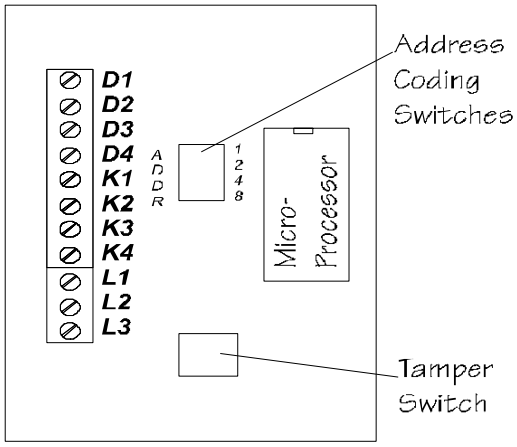

Note: Before powering up, the Zone Expander Unit must be addressed, using the coding switches – open switches to add up to the address required.

Terminal Allocations:

D RS.485
- 1 0v
- 2 +12v
- 3 'A'
- 4 'B'

K EOL Zones
- 1 0v
- 2 +12v
- 3 Zone 1
- 4 Zone 2

L Outputs
- 1 +12v
- 2 Output 1 –
- 3 Output 2 –

The same information is valid for the TMZ Module, which uses the same PCB, except that OUTPUT 2 is a SOUNDER output, suitable for driving a loudspeaker.

NOTE: Zones are available only at nominated Addresses – see page 4-5

(vii) ZEM (ZONE EXPANDER) UNIT

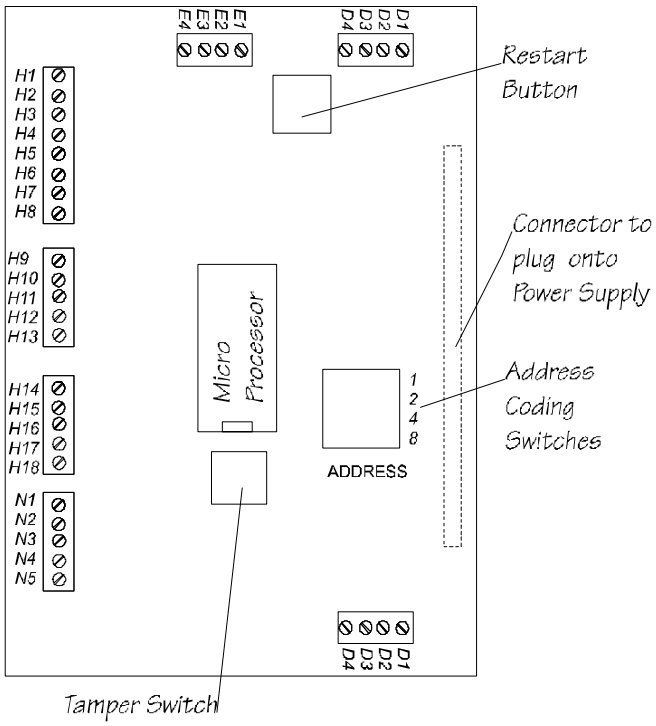

Note: Before powering up, the Zone Expander Unit must be addressed, using the coding switches – open switches to add up to the address required.

For details of zone numbering, see page 4-5.

If a Zone Expander Unit is plugged onto an Intelligent Power Supply, all connections are automatically made to draw current from the power supply, and to use the system diagnostic capabilities to control the power supply. Do NOT therefore connect the +12v terminal (D2) to the End Station, or to any other item that is directly connected to another power supply.

4-zone ZEM for use with Euro-12 has no iD or Output terminals, and 4 EoL zone inputs only.

Terminal Allocations

D	RS.485
1	0v
2	+12v
3	'A'
4	'B'
E	iD bus
1	0v
2	+12v
3	Line –
4	Line +
H	EoL Zones
1	Zone 1
3	Zone 2
6	Zone 3
8	Zone 4
11	Zone 5
13	Zone 6
16	Zone 7
18	Zone 8
2,7,12,17	Common
4,9,14	0v
5,10,15	+12v
N	Outputs
1	+12v
2	O/p 1 –
3	O/p 2 –
4	O/p 3 –
5	O/p 4 –

NOTE: When a ZEM is used in iD mode, it MUST be plugged onto an Intelligent Power Supply, unless used within 10 metres of the End Station.

For details of TMZ Zone Expander, see 'Tag Reader, on page 10-7.

(viii) OUTPUT MODULE

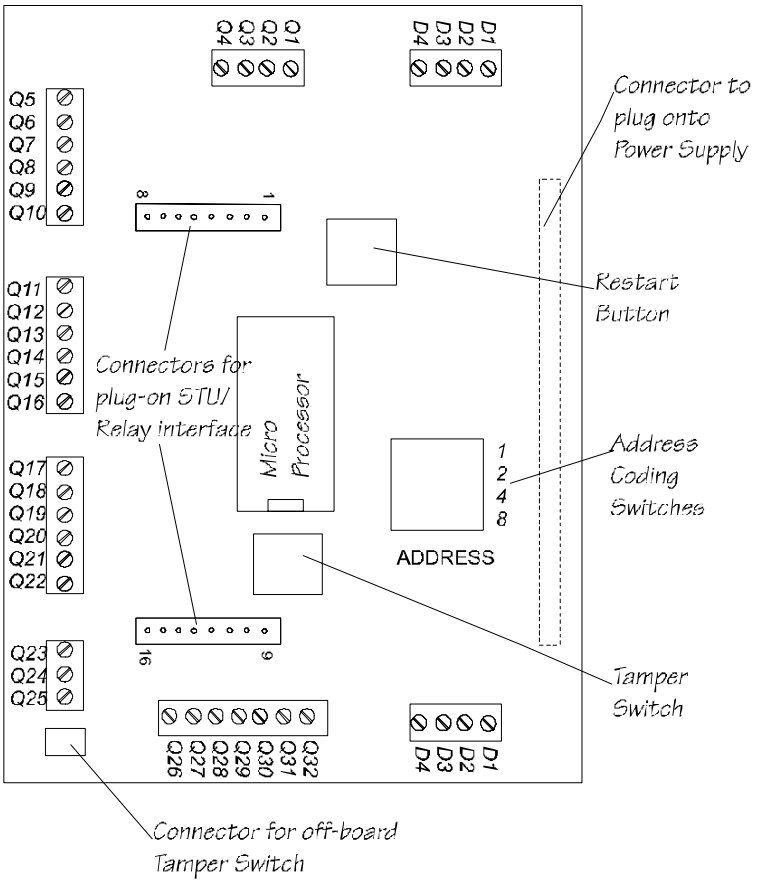

Note: Before powering up, the Output Module must be addressed, using the coding switches – open switches to add up to the address required.

Terminal Allocations

D	RS.485
1	0v
2	+ 12v
3	'A'
4	'B'
Q	Outputs
1	Output 1 -
3	Output 2 -
5	Output 3 -
7	Output 4 -
9	Output 5 -
11	Output 6 -
13	Output 7 -
15	Output 8 -
17	Output 9 -
19	Output 10 -
21	Output 11 -
23	Output 12 -
25	Output 13 -
27	Output 14 -
29	Output 15 -
31	Output 16 -

All even-numbered terminals are + 12v

When the Output Module is plugged onto an Intelligent Power Supply, all connections are automatically made to draw current from the power supply, and to use the system diagnostic capabilities to control the power supply. Do NOT therefore connect the + 12v terminal (D2) to the End Station, or to any other item that is powered from a different supply.

NOTE: Outputs are also available at Keypads, Tag Readers and Zone Expander Modules.

Loudspeaker outputs are available ONLY at the End Station and TMZ Modules.

Check for availability of an alternative module (EUR-040) with STU footprint outputs only.

Refer chapter 17 for additional information.

(ix) INTELLIGENT POWER SUPPLY

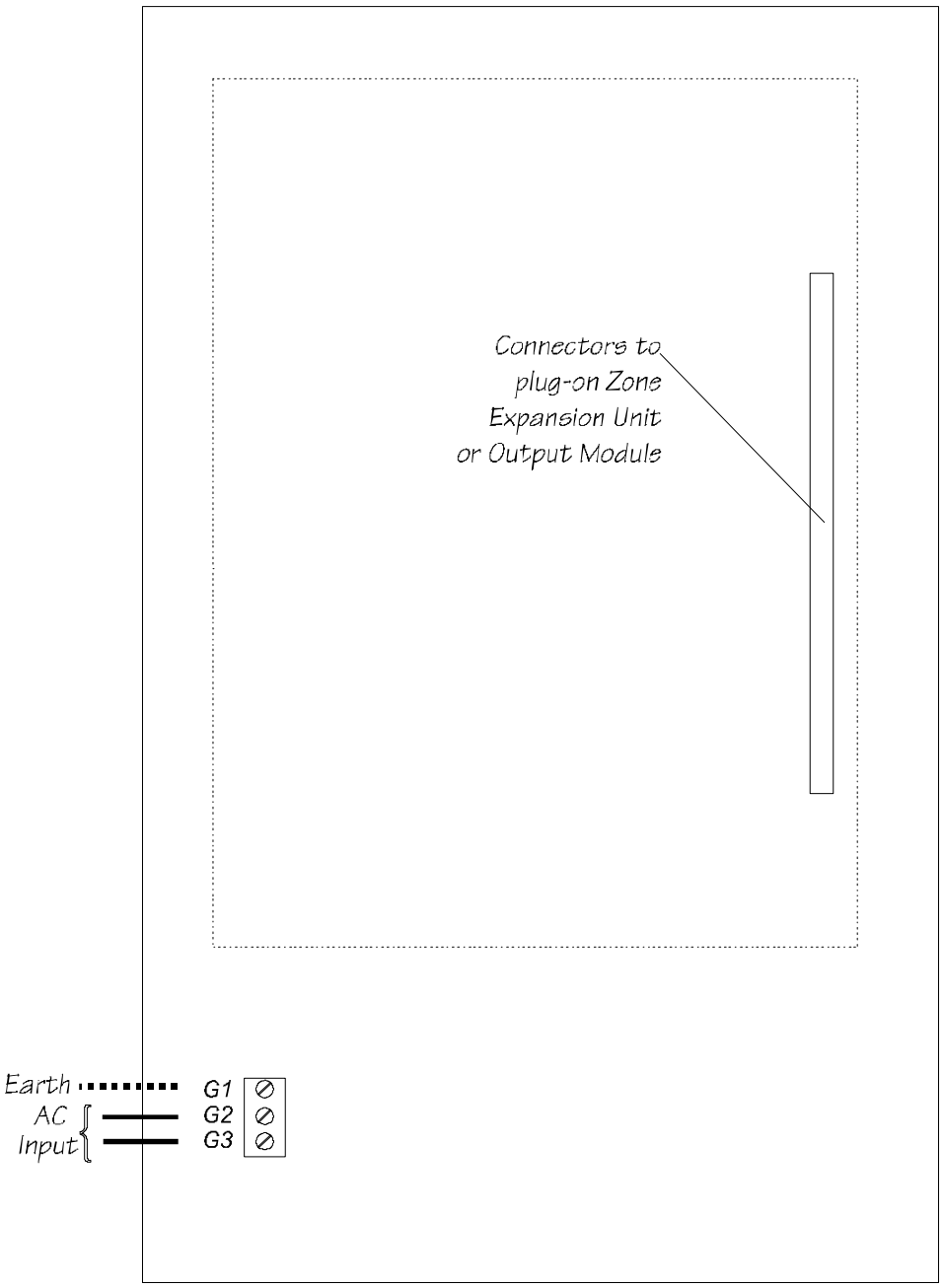

NOTE: The battery should NOT be connected until 'Battery Fault' is indicated on the system – see 10-4.

Terminal Allocations:
All connections are made through the connections to the item plugged onto the power supply, except the AC input, as shown.

Fuse F1: Battery Fuse, rated at 3.15 Amp

(x) PLUG-ON RELAY INTERFACE

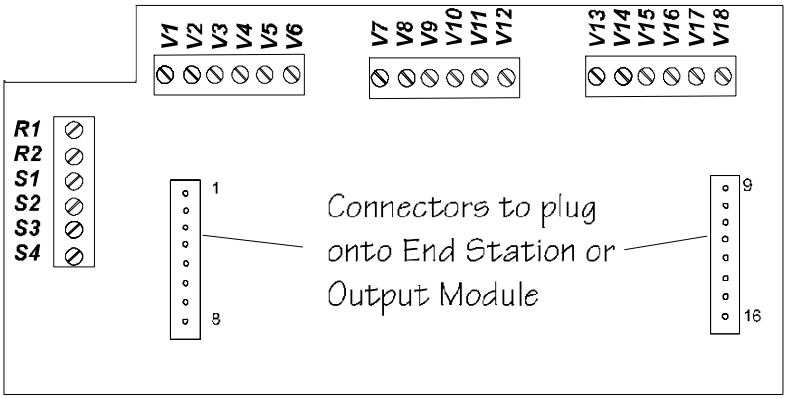

Terminal Allocations

R STROBE
- 1 Strobe –
- 2 Strobe +

S SIREN
- 1 Siren A –
- 2 Siren A +
- 3 Siren B –
- 4 Siren B +

V RELAYS
- 1 Relay 1 C
- 2 Relay 1 NO
- 3 Relay 1 NC

Repeat for relays 2 - 6

This interface may be plugged onto Euro-44+ (or 134/256) End Stations, and Output Modules.

Programme the outputs as follows:

Output	If on End Station	If on Output Module
Relay 1 (V 1-3)	STU output 1	Output 1
Relay 2 (V 4-6)	STU Output 2	Output 2
Relay 3 (V 7-9)	STU output 3	Output 3
Relay 4 (V 10-12)	STU Output 4	Output 4
Relay 5 (V 13-15)	STU output 5	Output 5
Relay 6 (V 16-18)	STU Output 6	Output 6
Strobe Output (R)	STU Output 9	Output 7
Siren outputs (S)	STU Output 10	Output 8

NOTE: Care must be taken to ensure that this PCB is plugged on correctly – use the pin numbers as a guide.

If Site Option "Digi-Reply" is set to 'Relay' the Siren and Strobe outputs on the relay PCB will be monitored in accordance with German specifications!

THIS PAGE LEFT BLANK FOR NOTES

Chapter 11

WIRING THE SYSTEM

This chapter describes how the system should be wired for maximum effectiveness.

Note that all components use the same identification for equivalent applications – eg D1,2,3,4 will ALWAYS be the RS.485 terminations, etc. The connection details that follow therefore are general to the entire system

A: PLANNING THE CABLE ROUTES

Please refer also to the section 'ElectroMagnetic Compatibility' in Chapter 10.

Care should be taken to avoid running alarm cables in the same trunking as, or otherwise close to cables carrying signals that may cause interference – e.g. telephone cables, etc.

Similarly, where practical, avoid routing cables close to equipment capable of generating interference – e.g. fluorescent lighting, welding equipment, etc.

Never run alarm cables in the same trunking as mains cables.

B: SCREENED CABLE

When screened cable is used, the screen should be terminated at the End Station (or Zone Expander Unit) only. For best results, connect to the metalwork immediately at the point of cable entry into the housing, with a 'pigtail' not exceeding 5 cm.

Terminals are provided in all Euro-MERiDIAN housings for this purpose.

Cables should NOT be looped inside the housings, or routed across or underneath printed circuit boards.

Ensure that screen connections are continuous through all intermediate detectors, junction boxes, etc.

Note: screened cable should ALWAYS be used for iD systems.

C: WIRING SPECIFICATIONS

The following specifications must be observed when installing Euro-MERiDIAN alarm systems:

A: General Principles:

1	Routing:	NO alarm system cable should be run with other cables carrying AC or digital signals
2	Insulation:	Protected by the use of grommets, etc. where appropriate.
3	Specifications:	The following specifications for cable types and distances are important for reliable operation.

B: RS-485 Wiring (Keypad, etc. connections):

1	Cores	4- core minimum. Use of 6-core and doubling up supply cores is beneficial to minimise volt drop, but NEVER double communications connections (D3-4)
2	Cable type:	Twisted pair, eg Belden 9744 (unscreened) or 9502 (screened).
3	Wiring format:	Parallel, 'daisy-chained.'
4	Cable length:	Overall network max 1 Km.
5	Termination:	Extreme end points fitted with 120Ω resistors between D3 / D4

C: End of Line Zone Wiring

1	Cores	4- core
2	Cable type:	Standard alarm cable; screened if required by environment.
3	Wiring format:	Detectors wired using EoL resistors, mounted at detector.
4	Cable length:	Max 1 Km per detector.

D: *iD* Wiring

1	Cable type:	Screened. 4- core minimum. Doubling up supply cores will minimise volt drop to detectors. Doubling of iD cores is also possible
2	Wiring format:	Any parallel format, except 'ring main' loops.
3	Termination	0.01µF capacitor between iD+/- at end of each cable run.
4	Cable length:	Max 100 metres for any cable run.
5	Biscuit location:	Must be wired directly to detector terminals.
		If it is impossible to locate the biscuit in this way, a 'DP' junction box must be used.
6	Checks:	All commissioning checks must be performed and recorded.
7	Warning:	In some situations, especially take-over sites using existing wiring, iD technology may not be suitable.

Castle Care-Tech Ltd. cannot be held responsible for problems arising from failure to follow this specification

D: RS.485 COMMUNICATIONS

See wiring specifications on page 11-2.

A maximum of 30 devices (including the End Station) may be connected to an RS-485 network. For larger systems (ie Euro-256, refer chapter 24.)

NOTE:

On a small system (up to 5 peripheral devices connected to the RS-485 bus, with a maximum of 200 metres of cable) in an electrically 'quiet' environment, standard alarm cable (4-core) may be used for this network, but this is NOT best practice.

E. END of LINE DETECTION

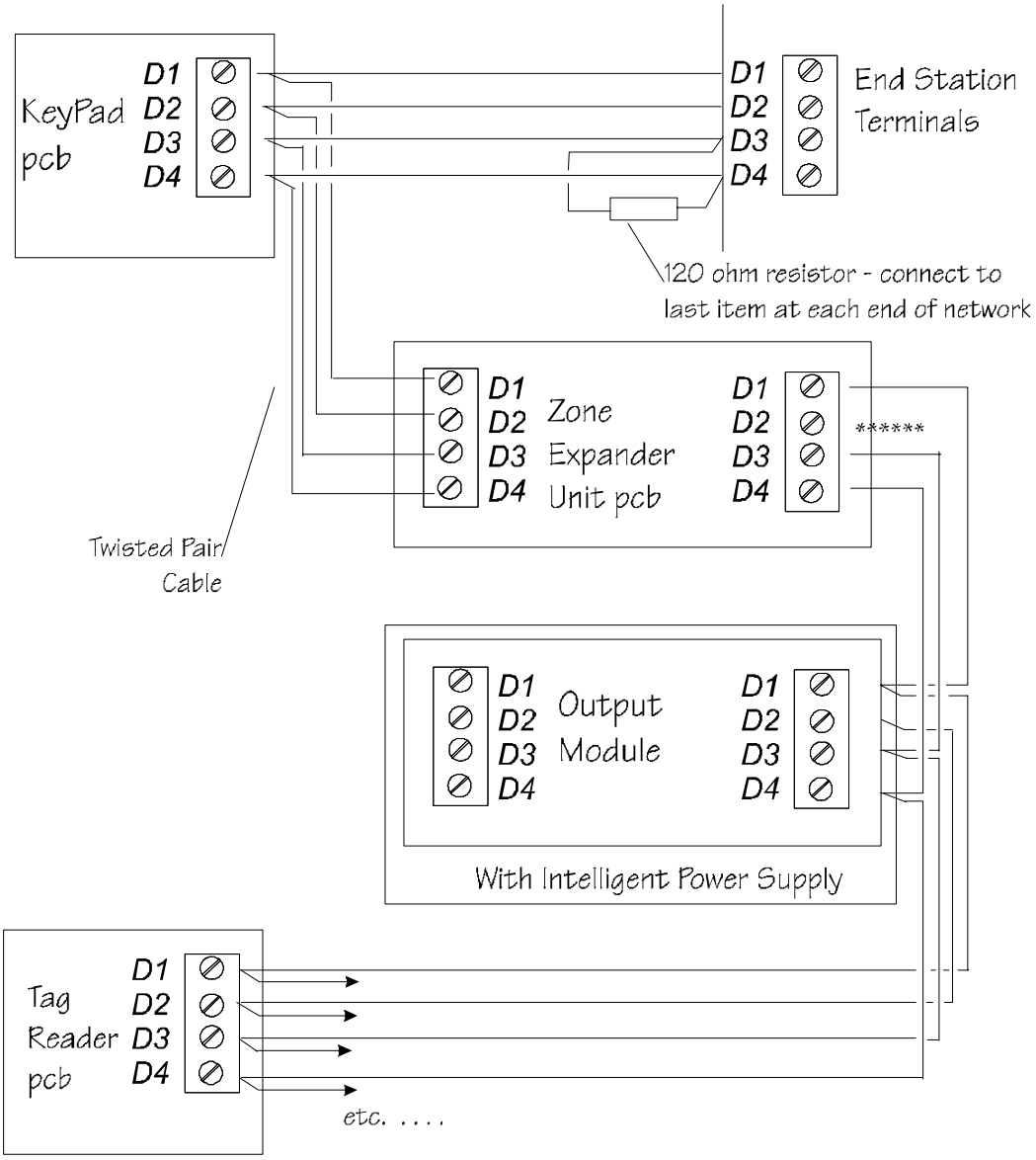

NOTES: Simply wire in parallel between all terminals with same legend.
***** - D2 connection (+12v) is BROKEN to prevent link between two separate power supplies

WIRING

See wiring specifications on page 11-2.

Single- or Double-resistor EoL wiring may be used.

NOTE: Zones are available only at nominated Keypads – see page 4-5

SINGLE RESISTOR WIRING

This is NOT suitable for systems installed to BS.4737, or to EN.50131 systems in grades 2 and above.

The 2K2 resistor MUST be located at the furthest point on the wiring circuit, or the wiring security it provides will be lost

Resistor colour code:

2K2 – Red / Red / Red / Gold

NORMALLY OPEN DETECTORS should be connected in the same way, with the 'Normally Open' attribute selected when programming the zone.

NOTE: Issue 3·1 software (& later) can use a total of 3 detectors with separate 4K7 resistors per circuit.
Peripheral devices (keypads, ZEMs, etc) must be fitted with software 1·19 (or later)

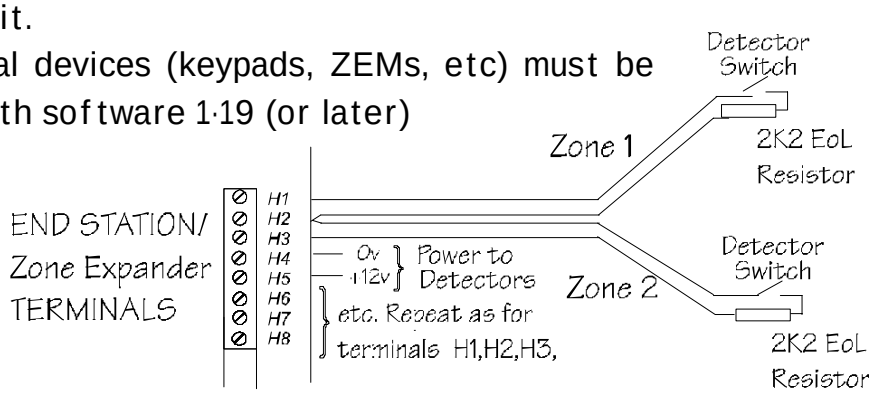

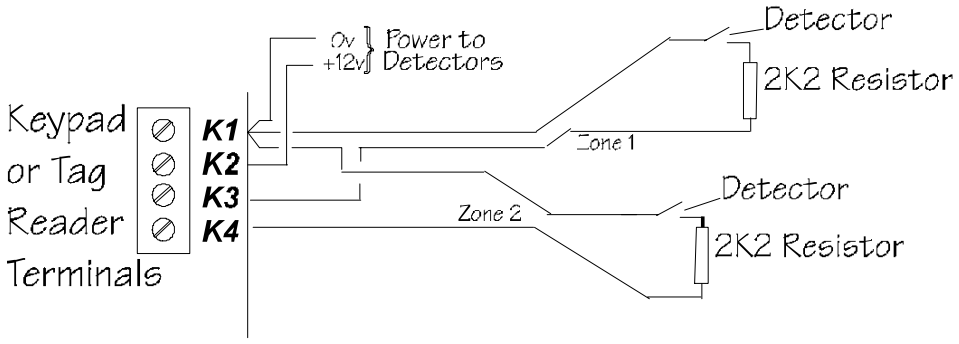

AVAILABLE ON DELUXE KEYPADS ONLY - NOT Standard Keypads.

DOUBLE RESISTOR WIRING

This is suitable for all systems installed to BS.4737, or to EN.50131.

The 2K2 resistor MUST be located at the furthest point on the wiring circuit, or the wiring security it provides will be lost

Resistor colour code:

2K2 – Red / Red / Red / Gold
4K7 – Yellow / Purple / Red / Gold

NORMALLY OPEN DETECTORS should be connected in the same way, with the 'Normally Open' attribute selected when programming the zone.

NOTE: Issue 3·1 software (& later) can use a total of 3 detectors with separate 4K7 resistors per circuit.
Peripheral devices (keypads, ZEMs, etc) must be fitted with software 1·19 (or later)

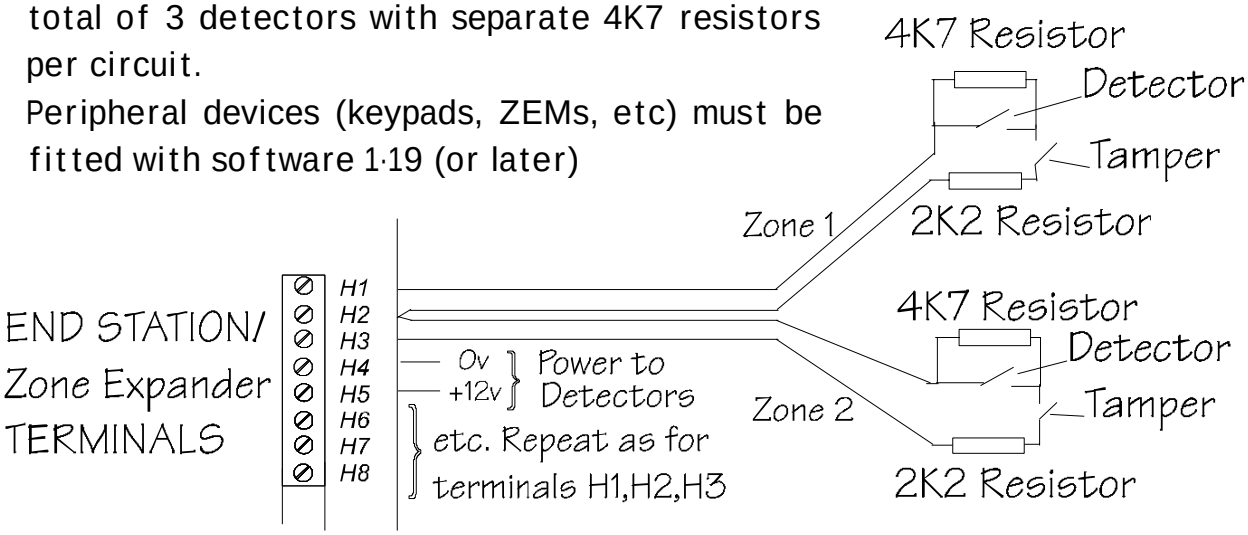

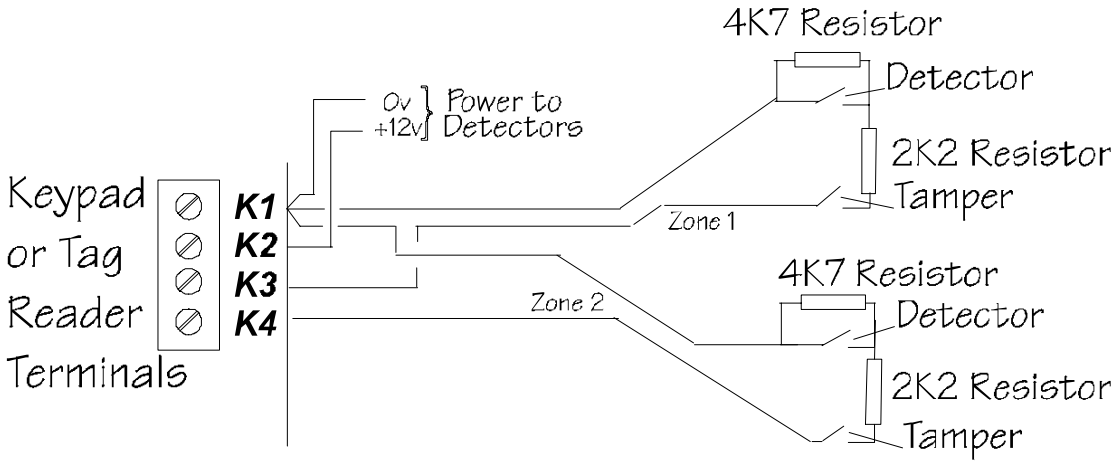

AVAILABLE ON DELUXE KEYPADS ONLY - NOT Standard Keypads.

F: iD Wiring

Castle Care-Tech Ltd. is a permitted user of iD.

See wiring specifications on page 11-2.

System response cannot be guaranteed if these specifications are not followed.

For details of zone numbering, see page 4-5.

The use of SCREENED cable is specified to minimise any problems from RFI, especially taking into account the lack of control over any wiring installed after the alarm system is commissioned.

iD is NOT a detection system, but a means of simplifying wiring by individually addressing a number of detectors wired to the control in parallel.

A small interface, known as a 'biscuit' – actually a silicon microchip - is used to achieve this, and wires directly into the terminals of any detector.

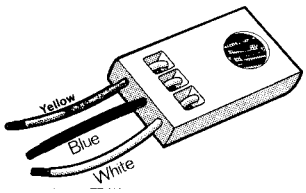

Each device has its own identification number, from 01 to 30, which must NOT be duplicated on the same network.

A new network (ie each new ZEM) has a new sequence of biscuits starting from 01.

The system polls the devices continuously for two signals:

a) A diagnostic signal showing that the device is correctly connected and functional – and that the tamper switch is correctly closed.

b) A signal to report the status of the detector being monitored.

The devices wire in any order and any parallel configuration, requiring two cores only for communication plus the supply for detectors.

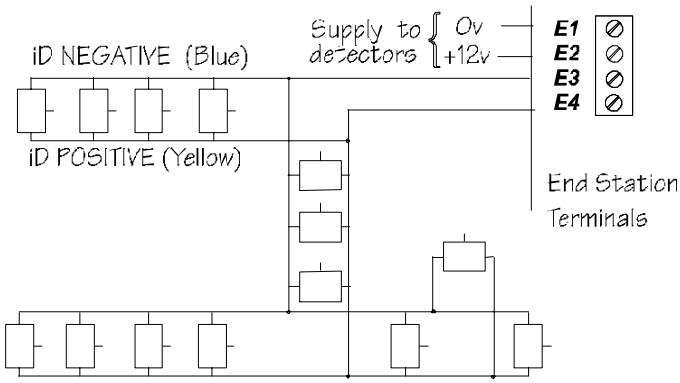

It is essential that the connections are correctly made, or serious malfunction of the entire iD network could result.

The standard wiring convention is YELLOW for the iD Line +, and BLUE for the iD Line –, which thus match the colour coding of the biscuit itself.

The third, WHITE, connection to the biscuit is used for the switch contact, as follows:

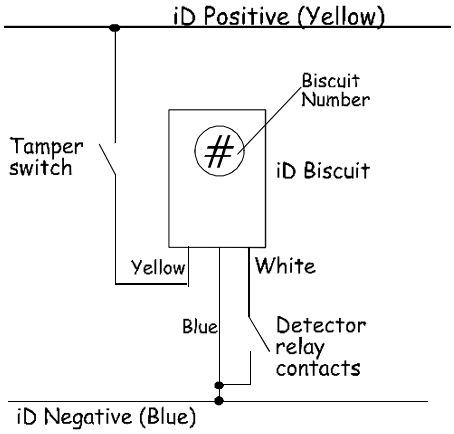

YELLOW: iD + Term E4
BLUE: iD - Term E3
Tamper switch:
In series with YELLOW
Switch contact:
Between WHITE and BLUE

The connections of the biscuit in a typical PIR are as follows:

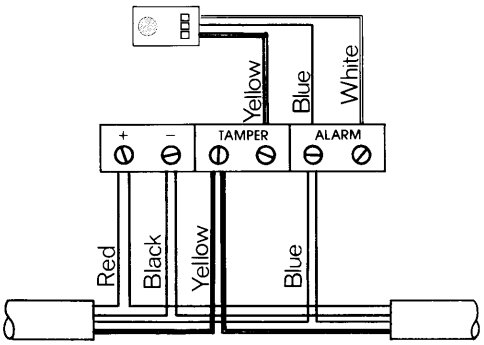

This shows the incoming cable from the End Station at one side and the ongoing connection to the next detector at the other. It is possible to spur off at this point to a further detector(s).

On completion of making connections, the biscuit should be placed neatly against the terminal block or cable form, ensuring that it does not obstruct the tamper switch, cause a short circuit, or obstruct the operation of the detector.

The biscuit should be wired directly to the terminals of the detector to which it refers. If there is insufficient space, use the iD 'DP' junction box - see page 11-8.

iD LINE TERMINATION

Each cable run should be terminated with a 0.01µF capacitor connected between iD + and - (yellow and blue) at the last biscuit.

NORMALLY OPEN DETECTORS should be connected in the same way. Select the 'Normally Open' attribute when programming the zone.

WINDOW FOIL and similar detectors require the iD 'DP' junction box, which interfaces an optically isolated circuit to the iD biscuit.

HINT: It will be found beneficial for subsequent maintenance and faultfinding purposes, to have a simple record of the cable layout and biscuit order available, eg:

```
ES—  01 - 10 - 05
 |
08 - 02 - 07 - 06
 |
 └   09 - 03 - 04
```

iD JUNCTION BOX TYPES:

T Basic junction box for extending cables, spurring, etc.

IL The 'IL' type junction box is now OBSOLETE.

DP Provides double pole circuit to interface to window foil, or other detectors that cannot be located close to the biscuit, for multiple contacts connected to the same biscuit, etc.

NOTE: The original 'DP' Junction box was designed for 24 Hour tamper, and similar circuits only, and does NOT separately identify a tamper circuit. This can be distinguished by having a socket for a 'plug-in' biscuit – the new type, with correctly identified tamper circuit, has terminals for a 'wired' biscuit.

Reminders for successful installation of an iD system:

1. **Ensure that all biscuits are correctly connected**
2. **Ensure that safe wiring distances are not exceeded and cable runs are correctly terminated.**
3. **Ensure that all biscuits are wired directly to the detector**
4. **Ensure that cabling specifications are carefully followed (see page 11-2).**
5. **Ensure that the resistance measurements are correctly checked and recorded (see next page).**

Castle Care-Tech Ltd. cannot be held responsible for problems arising from failure to follow these specifications.

NOTE: When a Zone Expander is used in iD mode, it is essential that it be plugged onto an Intelligent Power Supply, unless used within 10 metres of the End Station (or other power supply).

G: iD COMMISSIONING READINGS

On completion of the installation, it is essential that the commissioning readings described below be taken, both to ensure the integrity of the system and to satisfy the documentation requirements of BS.4737, etc.

This procedure has been agreed with NACOSS as an acceptable method of meeting these requirements:

1. Complete the wiring, but do not secure the detector housings.
2. Remove the iD + and – connections from the terminals E3 & 4 at the End Station, and twist them together.
3. Measure, and record, the following readings, at each detector:
   a: The resistance between the iD Blue and Yellow connections – and ensure that this is correct for the cable length involved (typically 100 metres of alarm cable will measure approx. 16 ohms).
   b: The supply voltage at the detector (if applicable).
4. Secure the detector housing, ensuring that the tamper switch is correctly closed.
5. Repeat the above for each detector.
6. Separate the iD + & – wires at the End Station, and measure and record the resistance between them. Compare the reading with the table on page 11-10 to ensure that the correct number of biscuits is being read. Investigate any significant variation.
7. Check the resistance reading between the iD + & – wires and mains earth. This should show open circuit; any reading could indicate an earth leakage, which may cause problems later.
8. Check the voltage reading between the iD + & – wires and the 0v and +12v terminals (E1,2). This should show open circuit; any voltage present will indicate a leakage, which may cause problems later.
9. Replace the iD wiring in the End Station terminals.
10. Test iD line response in diagnostic menu, and Walk test detectors.

Note: The measurements on this page are made with the wiring still in place at all detectors, and with power applied. The presence of the iD biscuits will not affect the readings.

Table of resistance readings for measurement at step 6, above:

No of biscuits	Nominal resistance	No of biscuits	Nominal resistance	No of biscuits	Nominal resistance
1	87K	11	7.9K	21	4.1K
2	43.5K	12	7.3K	22	3.9K
3	29K	13	6.7K	23	3.7K
4	21.8K	14	6.2K	24	3.6K
5	17.4K	15	5.8K	25	3.5K
6	14.7K	16	5.4K	26	3.3K
7	12.5K	17	5.1K	27	3.2K
8	10.9K	18	4.8K	28	3.1K
9	9.7K	19	4.6K	29	3.0K
10	8.7K	20	4.4K	30	2.9K

NOTE: These readings are a guide to the effectiveness of the wiring, and that all biscuits are correctly connected. This is NOT a diagnostic test for the biscuits themselves. A range of tolerance, roughly equivalent to the next figure above and below, should be expected.

Important Notes for installing *iD* systems

A transient generated by an iD biscuit whilst being addressed will occasionally cause another biscuit to perform a counter reset. This can result in the biscuit affected signalling again, at an incorrect address, and thus generate a 'twin device' alarm.

To eliminate this possibility a small value capacitor (0.01 ƎF recommended) should be wired across the iD line at a convenient biscuit or junction box, at the end of each iD spur.

A supply of suitable capacitors (marking code "103") is supplied with the Euro-MERiDIAN End station / ZEM.

Remember that some sites may not be suitable for the use of iD systems, whether because of the re-use of wiring of dubious history, or the presence of severe sources of electrical interference.

An iD **Test Meter is available from ACT Meters Ltd. (01744 886660).**

Training is recommended for all personnel working on iD **systems. Courses are available on application to the Sales Dept.**

H: OUTPUTS WIRING

When wiring outputs, do NOT exceed the maximum rating for individual outputs, or for the system power supply.

(i) SAB Connections

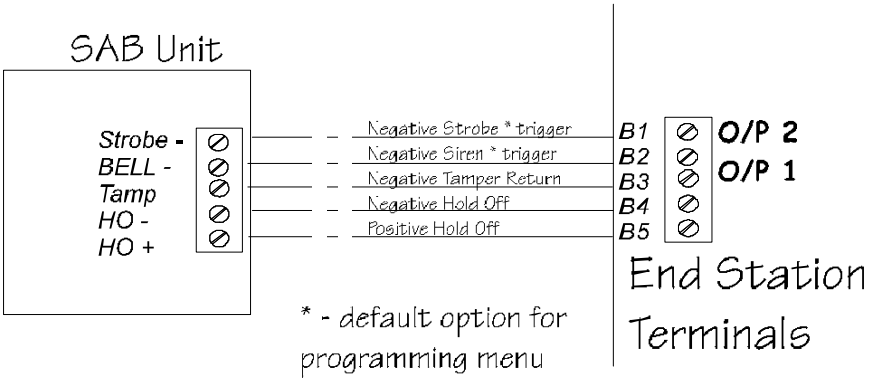

Current Available:

O/p 1 (Siren): 800mA

O/p 2 (Strobe): 800mA

Hold Off: 800mA

Note tamper return is NEGATIVE.

On Euro-44+ issue 1 End Station PCB there is NO fuse to remove to test SAB action.

OUTPUT RATING

Strobe and Siren Outputs are rated for 800mA each. Note that the 'Hold Off' fuse is rated as 800mA. This may be upgraded to 1.25A (only on End Stations with PSU of 1½ Amps or higher) with care, ensuring that the total current drain does NOT exceed the maximum rating of the power supply.

Ensure that the system power supply is not overloaded.

NOTE for Euro-44+ Issue 1 PCBs only:

Whilst the Strobe and Siren outputs are capable of powering up to 800 mA individually, the combined loading of these outputs must NOT EXCEED 800mA.

The maximum current that can be drawn from the Hold Off terminals (B4,5) is 650mA continuously, or 800mA for the duration of an alarm only.

If a higher current sounder is to be used, and which draws all current from the Hold Off connections (ie uses the 'Siren' feed solely as a 'trigger'), the additional current may be supplied by using terminals H9,10 for the Hold Off connections, and uprating fuse F1 to a suitable value – eg 1.0 or 1.25 Amps.

(ii) End Station Outputs

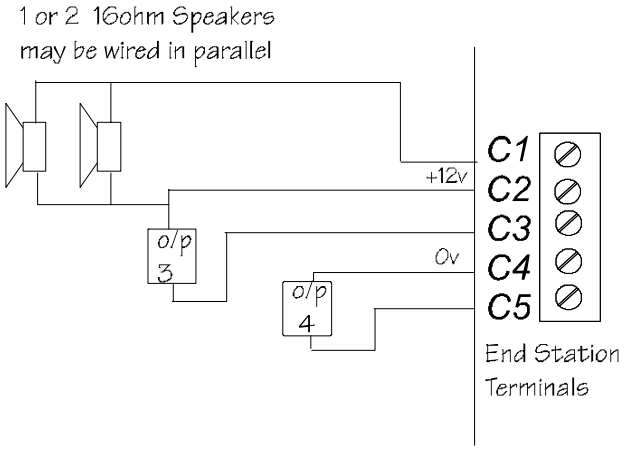

Current Available:

Speaker: 500mA
Output 3: 100mA *
Output 4: 100mA
Output 4 available on Euro-44+ only)

* - or to volt free relay contacts (Euro-44+ only) –

(iii) Zone Expander Unit Outputs

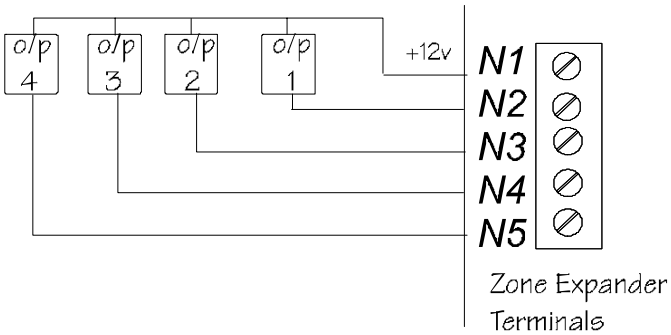

Current Available:

Each output : 250mA

Maximum combined total 400mA

See note below

NOT AVAILABLE ON 4-ZONE ZEM USED WITH Euro-12.

(iv) Output Module Outputs

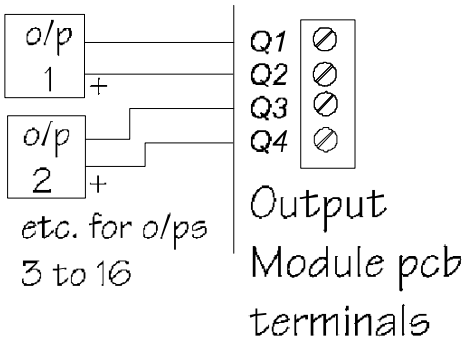

Current Available:

Each output : 250mA

Maximum combined total 400mA

See note below

NOTE: If the Zone Expander or Output Module is plugged onto a power supply, it is possible to rate one individual output at 800mA, by using terminal D2 for the +12v connection for that output.

(v) Keypad Outputs

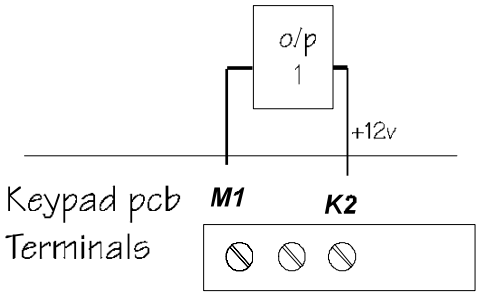

Current Available:

Output 1: 100mA

AVAILABLE ON DELUXE KEYPAD ONLY - NOT standard Keypad.

(vi) Set/Unset Tag Reader Outputs, also TMZ

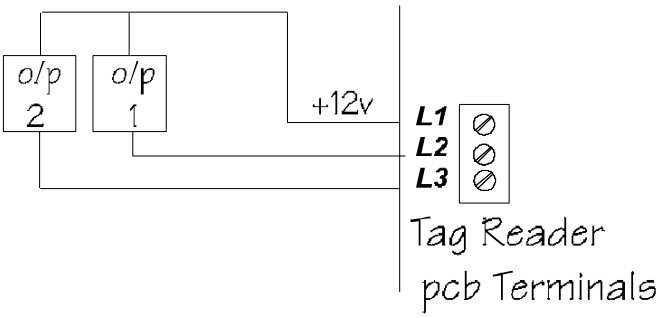

Current Available:

Each Output: 100mA

See note re TMZ.

When a Tag Reader is used as a Ward Controller, the outputs are automatically configured for this function.

NOTE: The <u>TMZ</u> uses the same PCB. In this application, Output 2 is configured as a loudspeaker output, suitable for driving 16-ohm loads.

Only this output may be used with a Euro-10 or 12 system.

(vii) Telecom Connections

Refer to Chapter 20 for details of these connections.

(viii) Access Control and Guard Tour Equipment.

Refer to Chapters 18 and 19 for details of wiring Access Control and Guard Tour equipment.

(ix) Plug-on Relay Interface

DEDICATED OUTPUTS

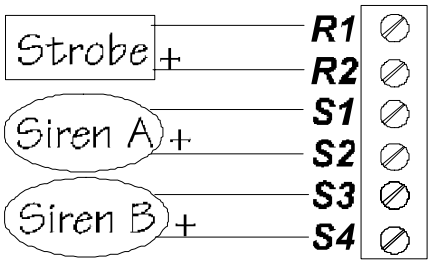

Current Available:
O/P R: 800mA
O/P S: 800mA

Note: Polarity shown is in ALARM condition. In non-alarm, these polarities are REVERSED to meet German specifications.

If "Digi-Reply" is selected as 'Relay' any unused outputs MUST have 4K7 resistor fitted between terminals.

RELAY CONNECTIONS

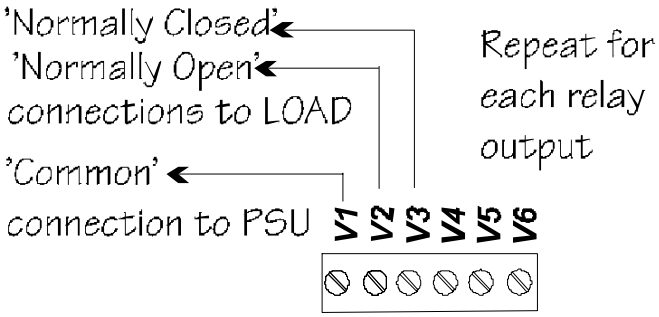

Switching Capability

Each relay is rated to switch up to 2.5 amps at up to 30v DC – dependent upon PSU in use.

Output Identification

Output	If on End Station	If on Output Module
Relay 1 (V 1-3)	STU output 1	Output 1
Relay 2 (V 4-6)	STU Output 2	Output 2
Relay 3 (V 7-9)	STU output 3	Output 3
Relay 4 (V 10-12)	STU Output 4	Output 4
Relay 5 (V 13-15)	STU output 5	Output 5
Relay 6 (V 16-18)	STU Output 6	Output 6
Strobe Output (R)	STU Output 9	Output 7
Siren outputs (S)	STU Output 10	Output 8

J: COMMUNICATIONS OUTPUTS

(i) A Stand-Alone STU / Dual-path signalling device

Euro-22 and 28

A 10-pin connector is provided, which can be used with a plug-on loom (Cat. No. CT1105) to connect to a STU or other communicator.

This loom must be plugged on with the BROWN wire towards the TOP of the printed Circuit Board (Pin 1 marking).

Euro- 10 and 12

An output module may be wired to the unit to provide a plug-on STU footprint.

Note: this module does NOT currently monitor the inputs.

Alternatively, a slot-in adaptor will be made available to fit into the Digimodem slot and provide a connector identical to that on the Euro-22 and 28.

PLEASE CHECK FOR AVAILABILITY

The pin allocation for these outputs is shown below.

Please ensure that the STU is correctly programmed:

Pin	Loom colour	Program o/p No.	Default
1	BROWN	$	'Line Fault' input
2	RED	$	'RedCare Reset' OR 'Fail to Communicate' input
3	ORANGE	-	+12v supply
4	YELLOW	5	Mis-operation (abort)
5	GREEN	1	Fire
6	BLUE	6	Confirmed Any
7	MAUVE	3	Intruder Any
8	GREY	2	Zone PA Any
9	WHITE	-	0v supply
10	BLACK	4	Set All

NOTES:

$ - These inputs MUST be enabled as shown on page 13-36.

Outputs provide +5v when triggered. Software 3·1 has "output invert" option is available for use with 'Positive Removed' signalling (see page 13-35).

These outputs have insufficient drive current available for any other application.

Inputs are configured to accept +ive triggers (5-12v).

(ii) A Plug-on STU / Dual-path signalling device

Euro-44+ and above

Any communicating device with the industry standard footprint may be plugged onto the End Station 'STU' pins OR onto an Output Module. The pin allocation for this device is shown below.

NOTES:

Outputs provide +5v when triggered. Software 3·1 has "output invert" option for '+ve removed' signalling. Insufficient current is available for other uses.

The channels triggered on a STU (except Versus GSM STU) are NOT the same as on a Digicom.

A plug-on module is available to provide high-current volt-free relay switches from these outputs.

$ - Inputs are configured to accept +ve triggers (5v). These inputs MUST be enabled as shown on page 13-36. The inputs are NOT currently live if an Output Module is used.

PCB Pin No.	Digi channel ALSO Versus GSM STU	STU channel NOT Versus GSM STU	Prog o/p No.	Default O/p type
1	1	1	1	Fire
2	2	2	2	Zone PA Any
3	3	3	3	Intruder Any
4	4	4	4	Set All
5	5	5 or 7	5	Misoperation
6	-	RedCare Reset Input	-	**See Note** $
7	Fail to Communicate Input	Not used	-	**See Note** $
8	Lo Bat	9 (Lo Bat)	9	-
9	+12v supply		-	-
10	0v supply		-	-
11	Not used		10	-
12	+5v supply		-	-
13	6	Not used	6	Confirm Any
14	7	6	7	Zone Omit at Rearm
15	Line Fault Input		-	**See Note** $
16	Digi Reset	8	8	Digi Reset

Please ensure that the Communicating device is correctly programmed.

Chapter 12

POWERING UP and ADDRESSING COMPONENTS

This chapter explains how to address the various system components, and perform the power-up routine.

A: ADDRESSING SYSTEM COMPONENTS

Before using the system, all items connected to the RS-485 communications bus must be allocated a unique address.

The number of components that may be fitted is dependent upon the model, and is detailed on page 4-1.

NOTE: RS485 bus protocol does not allow more than 30 devices from being connected to the bus. Development is under way to permit additional devices to be used for Euro-256 systems.

(i) KEYPADS

Keypads are addressed in software after powering up – see page 12-3.

(ii) Tag Readers, Access Door Stations, Guard Tour Points, TMZs, Zone Expanders, Output Modules

These are addressed by means of selection switches fitted. These must be correctly coded before the system is powered.

Set Points – Keypads, Tag Readers, TMZs, Access Door Stations and Guard Tour points share a single number sequence, of which address 00 is normally reserved for the primary system keypad, which must be present in order to commence programming the system.

From these, the Keypads/Tag Readers/TMZs with zone inputs used MUST be at the “live” addresses identified on page 13-7.

Zone Expanders and Output Modules number from 00 in individual number sequences. NOTE: TMZ units are addressed in the Set Point sequence as a Tag Reader – see above.

To address these items, identify the address coding switches, and open the switches to add up to the required address, thus:

Switch / Address	1	2	4	8	16
00	C	C	C	C	C
01	O	C	C	C	C
02	C	O	C	C	C
03	O	O	C	C	C
04	C	C	O	C	C
05	O	C	O	C	C
06	C	O	O	C	C
07	O	O	O	C	C
08	C	C	C	O	C
09	O	C	C	O	C
10	C	O	C	O	C
11	O	O	C	O	C
12	C	C	O	O	C
13	O	C	O	O	C
14	C	O	O	O	C
15	O	O	O	O	C

C denotes switch closed,
O denotes open.

B: PRE-POWER UP CHECKS

Perform a final check before powering up:

1: POWER SUPPLIES – must be adequate for the intended loading.

2: WIRING – must conform to the specifications shown in this manual.

3: CONNECTIONS – must be correctly made, with no loose 'whiskers,' etc.

When you are satisfied that these are all correct, and that all components (except keypads) are correctly addressed, proceed ....

C: POWERING UP

Power up initially on MAINS only. An alarm will be generated. Proceed to the nearest Keypad, which will display (from power up)

```
EURO KEYPAD
v.1.19   17/08/02
```

After 10 seconds, blanks, then:

```
ADDRESS
            [-  -]
```

Key 0 0 and YES

```
LANGUAGE
English      [00]
```

Press A to exit to normal mode, and use default code (1 2 3 4) to silence the alarm.

When the display shows

```
Call Engineer
Batt Fault 100
```

- and NOT before –

connect the battery to the End Station.

Additional keypads on the system must all be addressed in the same way, ensuring that no address duplicates another Keypad, Tag Reader, or Access Control or Guard Tour point.

Full programming of keypad addressing, etc. is performed as follows:

From initial power up:

```
ADDRESS
              [ -  - ]
```

If already initialised:

Press D for 10 seconds

```
ENTER CODE
              [        ]
```

Enter code 2 0 0 0

```
ADDRESS
              [ -  - ]
```

In either case, use B or D keys or number keys to insert address required, eg 01 for address No. 01

Press YES

```
LANGUAGE
English       [00]
```

Use B or D keys to select language required.

NOTE: This selects the character set used by the display. It does NOT provide language selection for the main system.

Press YES

```
ZONE STATUS
1: >25K    2: >25K
```

This displays the circuit resistance of the two zones wired to the keypad. In this example, both are open circuit.

Press YES

```
KEYCLICK VOLUME
TM TM TM TM TM TM TM [ 7 ]
```

Use B or D keys to adjust to volume level required (0 – 7) for keyclicks at this Keypad

Press YES

Repeat for "TAG VOLUME" and "MASTER VOLUME"

Press YES

```
TAG ID
Present Tag
```

If a Tag is presented, display shows the tag internal identification code

Press YES

```
FACTORY RESET
              [        ]
```

Permits Keypad to be returned to factory settings (ie **unaddressed**). Enter code 2 0 0 0 and YES.

Press A

```
BACKLIGHT FORCE
                    [ 0]
```

Use B or D keys to adjust to select “On [1]” to have backlight always on (except mains fail) or “Off [0]” for normal operation

Press YES

```
   Euro-MERiDIAN
Time          12:15
```

Keypad waits for system to be programmed.

Press A at any time to escape to normal mode.

NOTES:

Keypad 00 MUST be used the first time Engineer menu is accessed, and until remaining Keypads / Set/Unset Tag Readers are enabled in the main programming menu. All keypads should be correctly addressed BEFORE enabling them through the programming menu.

Access to the keypad programming menu is possible at any time to adjust the settings.

The information programmed at the Keypad in this way will be stored in the Keypad's individual non-volatile memory, independent of the remainder of the system.

"Backlight Force" option is NOT available on keypads fitted with software prior to issue 1.13 (March 2001)

D: Keypad Indications Test

With the system unset, pressing B for 10 seconds at any keypad will cause all LEDs at that Keypad to illuminate, and the LCD to scroll a display testing every pixel. The Keypad will revert to normal display approximately 10 seconds after the key is released.

Chapter 13

PROGRAMMING THE BASICS

This chapter explains how to programme a Euro-MERiDIAN system to meet the specified configuration.

A: THE ENGINEER MENU

The various programming functions are selected and manipulated from the Engineer (Programming) menu.

Basic programming features are described in this chapter; other more specialised facilities are detailed in relevant chapters, as follows:

Access Control	Chapter 18
ARC Signalling	Chapter 21
Downloading	Chapter 22
Guard Tour Systems	Chapter 19
Output Modules	Chapter 17
Shunt Zones	Chapter 16
SMS Messages	Chapter 23
Ward Control	Chapter 16

Additional facilities available only when MSX Cards are fitted (Euro-134 and 256) are noted in Chapter 24.

Whilst all functions can be programmed from the Engineer menu, it will be found much quicker and simpler to use a PC for this function, either connected to the panel by RS-232 interface or via the NVM programmer.

MAIN menu items are identified by use of CAPITAL letters.

ENTERING ENGINEER MENU

On a new system, only Keypad 00 is enabled by default. It is therefore necessary to use this keypad until the remainder are enabled from the Engineer Menu.

NOTE: The system MUST be fully unset before the Engineer or Manager menus can be accessed.

```
Euro-MERiDIAN
Time:      17:24
```

Enter engineer code (default 1111)

```
SET/UNSET SYSTEM?
```

Press NO

```
FORCE ARM ON 1st
ZONE?
```

Press NO

A tamper alarm is generated

```
Enter Code
          [      ]
```

Enter engineer code again

Alarm silences

```
CLEAN START?
```

The system is now in the Engineer 'Main' menu.

This gives access to a number of 'sub' menus, each of which enables a system function, or group of associated functions, to be programmed.

To use the engineer menu at a different keypad, simply press 'B' at the alternative keypad.

EXIT ENGINEER MENU

On completion of programming or use of test/diagnostic functions, the system can be returned to normal mode by:

```
EXIT ENGINEER
MENU?
```

Press YES or A

```
Please Wait
Saving NVM data
```

```
Please Wait
Checking System
```

The system will check the current status of zones that would trigger an alarm if open, as well as certain programmed parameters.

If the display shows a fault message, return to engineer menu and correct the problem before again attempting to exit (see below).

```
  Euro-MERiDIAN
Time:      17:24
```

OR:

With the display showing any MAIN menu item (ie shown in CAPITALS), press A. The sequence followed will then be as above.

NOTE: system voltage readings should NOT be taken immediately after exit - see page 10-4.

Fault Indications

Should one of the following messages be displayed on attempting to leave the engineer menu, correct the fault or adjust the programming before making a further attempt to exit:

```
Check Failed
Zone name
```

This indicates that a 24-hour Tamper or similar zone is in fault condition, or a tamper fault exists on the zone identified, so that an alarm would be generated if the system returned to normal mode. Multiple faults will scroll.

```
Error zone areas
not accessible
```

Zones have been programmed to an area(s) for which no Setting Point is valid to unset – eg it would be impossible to reset after a tamper alarm on that zone.

Programming must be adjusted before again attempting to exit.

```
Error some areas
cannot be unset
```

Setting Points have been programmed in such a way that it is possible to set an area that cannot be unset from any Setting Point.

Programming must be adjusted before again attempting to exit.

B: GENERAL PRINCIPLES

The various functions are selected and manipulated as follows:

Key	In main menu:	In sub menu:
NO	Moves forwards to next main menu item	Answers questions, also exits to next menu level above, retaining all alterations made
YES	Selects and enters sub menu indicated	Accepts option offered, and moves to next item
A	Exit from Engineer menu	-
B (= ←)	Moves backwards to previous menu item	Moves backwards to previous option
C	-	In Logs and Diagnostic menus, permits additional information to be displayed
D (= →)	-	Moves forward to next option, or toggles between 'YES/NO' choices.

TEXT PROGRAMMING

Text may be programmed for Zone names, for the 'sign-on' message, and to identify the area(s) being set/unset. In all cases, this is performed as follows:

Each key is allocated characters, which may be programmed as required:

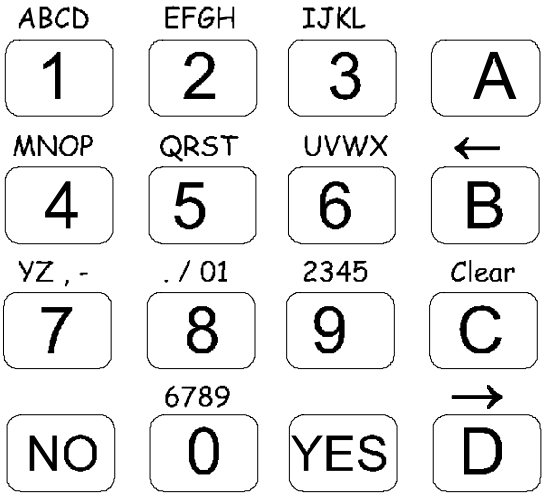

Press the relevant key the appropriate number of times – eg the 3 key twice for 'J' or 5 key three times for 'S.'

A key	will change the letter at the cursor position to a CAPITAL.
B key	backspaces one position to the LEFT.
C key	clears any character from the cursor position, and moves it one space to the right.
D key	moves the cursor position one position to the RIGHT.
YES key	accepts the text string as programmed, and returns to the relevant menu.

C: NON VOLATILE MEMORY

The End Station is fitted with a memory chip to retain all programmed information, codes and logs in the event of the system being powered down.

THE SYSTEM WILL NOT FUNCTION IF THIS NVM CHIP IS NOT PRESENT.

Additionally, each Keypad has its own non-volatile memory to retain its individual address and volume settings.

D: PROGRAMMING OPTIONS:

(i) CLEAN START

It is essential that a 'clean start' be performed at initial power up of a new system, to ensure that the initialisation is correct, to true factory defaults.

If the Non-Volatile Memory (NVM) chip is ever removed from the End Station, it MUST be replaced before starting programming. To perform a 'clean start:'

With the display showing

```
CLEAN START?
```

Press YES

```
Clean Start?
[       ]
```

Enter 2 0 0 0

```
Clean Start?
Please Wait
```

```
Panel has been
clean started!
```

Press NO

```
CLEAN START?
```

Press NO

Moves to next menu item

The system memory will now be restored to factory defaults, EXCEPT:

- LOGS are NOT cleared
- Keypad 00 remains enabled at all times
- Keypad in use remains enabled.
- Current Keypad areas are NOT changed

Note: If a new NVM chip is to be used, Logs should be cleared (see 15-3)

(ii) SOFTWARE REVISION

Selecting this option will display the software version fitted to the system, eg

```
Rev 3.1 UK
12345678 Euro44+
```

This identifies the software version number, software serial number and product, and should always be checked before contacting Technical Support. A record should be retained of this serial number for systems using SMS Message service – see 23-6.

(iii) MODE SELECTION

This programmes whether the End Station and any Zone Expanders enabled will be used in End of Line (default) or iD detection mode. This choice only exists on the Euro-44+ and above, smaller models are fixed.

The further choice of 'Single' or 'Double' resistor End of Line configuration for is global – including Keypads etc.

As part of the MODE SELECTION menu, the ZONE RESPONSE time should be programmed. This selects the time that a zone trigger must be present before the system responds by generating an alarm, and is programmable from 100mS (0.1 sec) to 3 seconds. This is a global selection.

NOTE: **settings below 400 mS or above 800mS do NOT comply with EN.50131 or BS.4737, and are provided purely for diagnostic purposes. Higher settings are more resistant to false stimuli / interference**.

With display showing

```
CHOOSE MODE?
```

Press YES

```
Detection Mode
EoL        [ 1]
```

Use D to select between iD [0] and EOL [1]

Press YES

```
EOL Mode
DR         [ 1]
```

Use D to select between SR [0] (for single resistor) and DR [1] (for double resistor)

Press YES

```
Zone Response
800 mS     [08]
```

Adjust this setting for diagnostic purposes only.

Press YES

```
Zone XDF
Dynamic    [0]
```

DO NOT CHANGE THIS SETTING, unless specifically advised to do so by Castle Care-Tech Ltd. Technical Support staff.

Press YES

```
CHOOSE MODE?
```

Press NO

Moves to next menu item

NOTES:

When a ZEM is enabled, its detection mode will automatically be set up as shown in the table on page 13-7.

Zones wired from Keypads / Tag Readers will always be 'End of Line,' regardless of mode selected.

(iv) INSTALL ZEMs

Any Zone Expander Modules fitted to the system must be enabled. They will automatically be set up in the mode determined by the 'mode' selection made (see above). Refer to table of zone locations on page 13-7 to identify actual pattern of iD / EoL ZEMs in such cases.

With display showing

```
INSTALL ZEMs?
```

Press YES

```
ZEM Address
            [ 0]
```

Select ZEM to be enabled, eg press 1 and YES

```
ZEM Installed
No          [0]
```

Use D to select 'Yes [1]' and press YES

```
ZEM Address
            [ 1]
```

Repeat for additional ZEMs or Press NO

```
INSTALL ZEMs?
```

Press NO

Moves to next menu item

(v) ZONE PROGRAMMING

By default, all zones are pre-set as 'isolated' and must be programmed before the system can be used. The zone will NOT be live (and hence cannot be Walk Tested) until exiting Engineer mode.

All zone triggers that initiate an alarm will be entered in the system logs (see also "Special Logged" zone attribute).

The zones on the system are distributed as shown in the table on the next page:

System Zone map:
The zones on the system are distributed as follows:

Euro-	10	12	22	28	44 +		134		256	
Mode	iD	EoL	EoL	*iD*	EoL	*iD*	EoL	*iD*	EoL	*iD*
iD zones										
End Station	1 -10	-	-	1 –20	-	1– 30	1-30	1 – 30	1-30	1 – 30
ZEM 0	-	-	-	-	-	-	-	31-60	31-60	31-60
ZEM 1	-	-	-	-	-	-	-	61-90	61-90	61-90
ZEM 2	-	-	-	-	-	-	-	91-120	91-120	91-120
ZEM 3	-	-	-	-	-	-	-	-	-	121-150
ZEM 4	-	-	-	-	-	-	-	-	-	151-180
ZEM 5	-	-	-	-	-	-	-	-	-	181-210
ZEM 6	-	-	-	-	-	-	-	-	-	211-240
EoL zones										
End Station	-	1-8	1 – 6	-	1 - 6	31-36	-	-	-	-
ZEM 0	-	9-12	7 – 14	-	7-14	-	31-38	-	-	-
ZEM 1	-	-	-	-	15-22	-	39-46	-	-	-
ZEM 2	-	-	-	-	23-30	-	47-54	-	-	-
ZEM 3	-	-	-	-	31-38	-	55-62	-	121-128	-
ZEM 4	-	-	-	-	-	-	63-70	-	129-136	-
ZEM 5	-	-	-	-	-	-	71-78	-	137-144	-
ZEM 6	-	-	-	-	-	-	79-86	-	145-152	-
ZEM 7	-	-	-	-	-	-	87-94	-	153-160	-
ZEM 8	-	-	-	-	-	-	95-102	-	161-168	-
ZEM 9	-	-	-	-	-	-	103-110	-	169-176	-
ZEM 10	-	-	-	-	-	-	111-118	-	177-184	-
ZEM 11	-	-	-	-	-	-	-	-	185-192	-
ZEM 12	-	-	-	-	-	-	-	-	193-200	-
ZEM 13	-	-	-	-	-	-	-	-	201-208	
End Station	-	-	-	-	-	-	119-124	121-126	209-214	241-246
K'PAD 00	-	-	15-16	21-22	39-40	37-38	125-126	127-128	215-216	247-248
K'PAD 01	-	-	17-18	23-24	41-42	39-40	127-128	129-130	217-218	249-250
K'PAD 02	-	-	19-20	25-26	43-44	41-42	129-130	131-132	219-220	251-252
K'PAD 03	-	-	21-22	27-28	-	43-44	131-132	133-134	221-222	253-254
K'PAD 04	-	-	-	-	-	-	133-134	-	223-224	255-256
	NOTE: Zones are **NOT** available on Standard Keypads								etc.	

Zone types:

The zone types available are:

Type		Operation
00	Isolated	Factory default Zone is programmed out of operation
01	Fire **See Note**	Active at all times Audible response: Full (differentiated) Communicator: 'Fire' signal
02	Gas	Active at all times Audible response: Full (differentiated) Communicator: 'Gas' signal
03	PA	Active at all times Audible response: Full (differentiated) Communicator: 'Hold Up' and 'Zone PA' signals
04	Silent PA	Active at all times Audible response: None Communicator: 'Hold Up' and 'Zone PA' signals
05	Tamper	When unset: Audible response: Internal only Communicator: 'Tamper' signal When set: Audible response: Full Communicator: 'Tamper' + 'Intruder' signals.
06	Intruder	Active when set Audible response: Full Communicator: 'Intruder' signal

Type		Operation
07	Final Exit (FX)	Active when set – initiates Entry time If system not unset before entry time expires: Audible response: Full Communicator: 'Intruder' signal
08	Entry Route (ER)	Active when set, except during entry time Audible response: Full Communicator: 'Intruder' signal
09	ER /Area FX	When Fully set, acts as ER zone, as above When 'Part' set, acts as FX zone, as above
10	FX /Area ER	When Fully set, acts as FX zone, as above When 'Part' set, acts as ER zone, as above
11	PTS	Active during exit time to complete setting procedure. No audible or communicator response. **Note: may be used to act as a 'doorbell' by use of 'chime' attribute.**
12	Switcher	Active at all times. No audible or communicator response. Triggers associated output for switching other equipment.

Type		Operation
13	Day Alarm	When system SET: Audible response: Full Communicator: 'Intruder' signal When system UNSET: Audible response: Programmable Communicator: 'Day Alarm' signal
14	Block-schloss	Active at all times No audible or communicator response. Accepts input from a keyswitch (or equivalent) to arm / disarm the area(s) assigned to it. Arming is INSTANT. An associated 'can set' output is available to provide interlocking.
15	Ward Control	Zone is allocated by system software and cannot be reprogrammed to a different type (see note), though relevant attributes may be adjusted. See chapter 16 for further information.
16	Trouble	Active when system is unset. Audible response: Graduated Internal. Triggers 'Technical Fault' output. Accepts input from detectors to indicate a problem, eg masking. If input is active, system cannot be set - may be manually overridden. Logs activation at ALL times.
17	Closure Super-vision	Active during setting procedure. No audible or communicator response. Prevents system being set whilst active.
18	Shunt	Active at all times No audible or communicator response. Accepts input from a keyswitch (or equivalent) to shunt the zones assigned to it. Associated outputs are available. See Chapter 16 for further information.
19	Unset	Active when system is set. Accepts input from keyswitch (or equivalent) to UNSET the area(s) assigned to it.
20	Key-switch	Always active. Accepts input from keyswitch (or equivalent) to set/unset the area(s) assigned to it. Setting includes normal exit time, etc.
21	Entry Shock	Active when system set. Used in conjunction with 'FX' zone, monitors for attempts to force initial entry door. **See page 9-9 for full details**.

Notes:

Types 13 - 18 are NOT available on Euro-10/12.

Types 13, 15-17 are NOT available on Euro-22/28.

Newly programmed zones will NOT be live, and therefore cannot be walk tested, until after exiting from Engineer mode.

An 'Entry Route' zone trigger will be stored for 2 seconds before an alarm is activated. If a Final Exit zone is triggered within this time, the system will select entry time, rather than an alarm.

'Part' set refers to levels B, C or D on a 'Level Setting' system, or to any combination other than "all available areas" on an 'Area Setting' system.

Use of Fire Zones

Any fire detectors used MUST be selected and sited to meet the requirements of BS.5839. Euro-MERiDIAN is NOT suitable for use on sites requiring a fire alarm system installed to full BS.5839 specifications, but may be used to monitor an alarm signal from such a fire alarm panel in order to trigger a communicating device.

SECURITY PATTERNS

There are two setting patterns available on the Euro-MERiDIAN range. Euro-44+ and above have choice (see page 13-36), others are fixed as 'Level Setting:'

LEVEL SETTING

The user has a choice of setting A or B or C or D; each 'set' level will provide a different pattern of security coverage. Each zone therefore will need to be allocated into the required patterns (or levels).

For example, the front door may need to be active in all setting scenarios, and would therefore be programmed as [ABCD]. On the other hand, the master bedroom may only need to be active if ALL the system is set, and would therefore be assigned [A]. The kitchen may need to be active at all times, except when the dog is left at home ('D' set) and at night ('B' set) and would be programmed [A C].

AREA SETTING (Euro-44+ and above)

The user has the option of setting any combination of the areas, and of 'adding to' or 'subtracting from' those areas set at any time.

Normally zones are allocated to a single area. Alternatively, they may be programmed to more than one area, in which case the choice of 'ANY' (zones live if any of programmed areas is set) or 'ALL' (zones live only if all of programmed areas are set) will apply for those zones.

For full details refer page 7-2.

NOTE: "UNSET" zones will ALWAYS use the "ANY" response.

ZONE ATTRIBUTES

Any zone may be programmed with any combination of these attributes, except as shown.

Attribute	Response modification
Chime	System loudspeaker(s) will 'chime' when zone triggered whilst relevant area is unset.
Single	System chimes once when zone triggered
Follow	System chimes until zone is cleared.
	Applicable to 'Intruder' 'FX' 'EN' and 'Switcher' zones.
	Zone concerned will NOT be displayed.
Omittable	Enables zone to be manually omitted during set procedure
Double knock	This zone must be triggered twice within a (programmable) pre-set period, or remain in fault condition for that period, for an alarm to be generated.
	Use with care in view of security risk involved.
Dual Trip	To generate an alarm, this zone, and another like-programmed zone with adjacent number, must be in fault condition at the same time. Either zone in fault condition will prevent the system from setting.
	Not available on Euro-10/12
Normally Open	Permits detectors of 'normally open' configuration to be wired to the system. Alternatively converts zone types which default to 'normally open' (eg PTS) to operate with normally closed devices.
Special Log	Forces a log entry when the zone is opened or closed, even when an alarm does not result. Select to apply when system is set, when unset, or always. This attribute MUST be selected for switcher zones required to activate SMS text messages.
Confirm Group	Zone will not 'confirm' an alarm triggered by another zone from same group. Groups 01-99 available. Default '00' denotes NOT part of a group. Zones allocated to Confirm Group 99 will always generate an (unconfirmed) alarm condition, but will NEVER generate a "confirmed" signal, regardless of the group in which the initial zone is allocated. See page 9-9.

PROGRAMMING STEPS

With the display showing

```
CHANGE ZONES?
```

Press YES

```
Zone Number
        [01]
```

Press YES

```
Zone Type
Isolated    [00]
```

EITHER use D to scroll to required setting OR key in zone type number from table above – eg 07

```
Zone Type
Final Exit [07]
```

Press YES

```
Zone Areas
        [ABCD]
```

Use keys to select the security patterns required, eg press A B

```
Zone Areas
        [AB   ]
```

Whilst programming this step, the relevant keypad Area (A,B,C,D) keys will illuminate when that pattern is selected.

Press YES

```
Zone Areas
Any         [0]
```

Area Setting systems only:

Use D to select 'Any [0]' or 'All [1]' as required

Press YES

```
Zone Attributes?
```

Press YES

```
Chime
No          [0]
```

Use D to select No [0], Single [1] or Follow [2]

Press YES

```
Omittable
No          [0]
```

Continue to select zone attribute options as required, until

```
Zone Name?
```

Press YES

```
Enter Zone Name
Zone 01
```

Enter text to identify zone, as described on page 13-3.

Press YES

```
Zone Number
                [01]
```

EITHER key in next zone number to programme, or NO to exit function

```
CHANGE ZONES?
```

Press NO

Moves to next menu item

NOTES:

After programming the zone, exit engineering for this to take effect before walk testing, etc.

See Chapter 16 for information relevant to 'Shunt' zones.

(vi) ASSIGNING KEYPADS and TAG READERS

NOTE: All keypads and Tag Readers MUST be correctly addressed before attempting to program them in this menu. See page 12-3.

Each setting point can be programmed:

SETS – which security pattern(s) can be Set from it. Limits operation to these areas, regardless of availability of code used. Euro-10/12/22/28 can select any ONE level as alternative to All system.

UNSETS – which areas can be Unset from it. Limits operation to these areas, regardless of availability of code used. Not applicable to level-setting systems.

IN - which area(s) it is located in. Defines operation on exit and entry, as described on page 5-3. NOT APPLICABLE TO LEVEL SETTING SYSTEMS.

> Care should be taken to ensure that every area that can be set, or to which a zone is allocated, can be unset by at least one Keypad or Set/Unset Tag Reader.

Tag Readers can further be selected as:

Access Control or Guard Tour points (Euro-44+ and above) – see Chapters 18 and 19

or

'Ward Controllers' –Chapter 16.

PROGRAMMING A KEYPAD:

With the display showing

```
ASSIGN KEYPADS/
READERS?
```

Press YES

```
Address
        [0]
```

Use number keys (or D) to select address

Press YES

```
Type
Keypad      [0]
```

Use D to select 'Keypad [0]' or 'Reader [1]' Select [2] to DISABLE

Press YES

If Euro-10/12/22/28

```
Default Level?
          [A ]
```

Select System Level that will be set when code/tag used at this set point

If Euro-44

```
Set Point Sets
Areas      [ABCD]
```

Press appropriate key(s) to select the areas (or a single level) required, eg Press A

```
Set Point Sets
Areas      [A   ]
```

Whilst programming this step, the keypad Area (A,B) keys will illuminate when that area is selected.

Press YES

```
Set Point Unsets
Areas        [ABCD]
```

Press appropriate key(s) to select the areas required, eg

Press A

```
Set Point Unsets
Areas        [A   ]
```

Whilst programming this step, the keypad Area (A,B) keys will illuminate when that area is selected.

Press YES

```
Set Point In
          [ABCD]
```

Press appropriate key(s) to select the areas required, eg

Press A

```
Set Point In
          [A   ]
```

Whilst programming this step, the keypad Area (A,B) keys will illuminate when that area is selected.

Press YES

NOTE: For control of 'Common Lobby' type applications, it should be selected as 'IN' multiple areas.

Press YES

```
Set Point Name?
```

Permits name to be programmed for Set Point to simplify locating the item in the future.

Press YES

```
Set Point Name
Reader 0
```

Enter text, as described on page 13-3.

Press YES

```
Address
          [0]
```

EITHER key in next keypad number to programme, or NO to exit function

Press NO

```
ASSIGN KEYPADS/
READERS?
```

Press NO

Moves to next menu item

PROGRAMMING A TAG READER AS A 'SET POINT:'

With display showing

```
ASSIGN KEYPADS/
READERS?
```

Press YES

```
Address
          [0]
```

Select address required, eg

Press 4

```
Address
          [4]
```

Press YES

```
Type
Not Used     [2]
```

Use D to select 'Reader [1]'

Press YES

```
Reader is    [0]
Set Point
```

Press YES to select 'Set Point [0]'

Then proceed in exactly the same way as for programming a Keypad.

NOTES:

To programme a Tag Reader as

Access Control Reader	See ch. 18
Guard Tour Point	See ch. 19
Ward Controller	See ch. 16

A **TMZ** should be programmed as a Tag Reader; use the "controls" and "in" options to select which areas sound will be generated for.

(vii) CHANGING SYSTEM DISPLAYS

This permits tailoring of the display information referred to in Chapter 6.

'Area' and 'Full' setting texts may be customised to meet site requirements. Additionally, the 'sign-on' message may be reprogrammed, and a site reference code programmed.

Options are available to adjust the timing of the displays, such that

- 'Areas set' status may be displayed whilst set
- 'Alarms' (other than PAs) may be displayed whilst active
- 'PA Alarms' may be displayed whilst active (†)
- 'Faults' may be displayed whilst unset (†)
- 'Zones in fault' may be displayed in real time whilst unset. (†)
- 'Zones omitted' may be displayed for 15 seconds as the system is unset. (†)

- without requiring code entry.
(†) - not available Euro-10 / 12.

With the display showing

```
SYSTEM DISPLAYS?
```

Press YES

```
Area A Text
Area A
```

Enter text, as described on page 13-3.

Press YES

```
Area B Text
Area B
```

Repeat for other areas.

Press YES

```
Full Area Text
Full Area
```

Enter text, as described on page 13-3.

Press YES

```
Sign-on Message
_   MERiDIAN
```

Enter text, as described on page 13-3.

Press YES

```
Site Name
_
```

Enter text, as described on page 13-3.

Press YES

```
Display When Set
No          [0]
```

Selects whether system status information (ie which areas are set) is displayed, whilst system is set.

Use D to select between 'No [0]' or 'Yes [1]'

Enter text, as described on page 13-3.

Press YES

```
Display Alarms
No          [0]
```

Selects whether all alarms are to be displayed immediately, without code entry.

Use D to select between 'No [0]' or 'Yes [1]'

Press YES

```
Display Faults
No          [0]
```

Selects whether system fault information is displayed whilst system is unset or partially set, without requiring code entry.

Use D to select between 'No [0]' or 'Yes [1]'

Press YES

```
Display PAs
No          [0]
```

Selects whether PA alarms are to be displayed immediately, without code entry.

NOTE: 'Display Alarms' MUST also be selected as YES to use this option.

Use D to select between 'No [0]' or 'Yes [1]'

Press YES

```
Display Zones
No          [0]
```

Selects whether zone fault information is displayed in real time whilst system is unset or partially set.

Use D to select between 'No [0]' or 'Yes [1]'

Press YES

```
Display Omits
No          [0]
```

Selects whether a summary of omitted zones is displayed as the system is unset.

Use D to select between 'No [0]' or 'Yes [1]'

Press YES

```
SYSTEM DISPLAYS?
```

Press NO

Moves to next menu item.

(viii) CHANGING TIMERS

The various timers on the system are:

Timer	Function	Range	Default
Entry Time	Entry time for each Area	0 – 255 seconds	30
	If entry time is started at a door programmed to multiple areas, the longest time will apply		
Exit Time	Exit time for each Area	5 – 255 seconds	30
	If the system is being set at a Set Point programmed as 'IN' multiple areas, the longest of those times will apply		
Where multiple entry and exit routes exist within a single area, the timers must be set for the longer route.			
Siren Time	Cut off time for external sounder for each Area	1 – 99 minutes	15
Confirm time	Sets time period during which a second activation must occur to qualify as 'sequentially confirmed' alarm.	0 - 99 minutes DD243:2002 specifies between 30 and 60 minutes	30
Siren Delay	Delay after intruder alarm before siren live	0 – 20 minutes	00
	NOT valid within three minutes of final set, or after entry time started. If 'Silent 1st Alarm' selected, delay commences at confirmed alarm.		
Strobe Time	Time Strobe output remains live after Siren time ends '99' represents endless	0 – 99 minutes	00
Re-Arm Number	Number of times system re-arms after Siren time ends	0 – 9	3
	Note: rearm number applies to each area, and does not affect emergency alarms. '9' represents always rearm		
AC signal Delay	Time delay before Mains failure or Technical alarm generated	0 – 250 minutes	60
	NB setting '250' = never alarms System response and indication is always immediate		

Timer	Function	Range	Default
Speaker Time	Time Speaker and Keypad Bleeper outputs remains live after Siren Time ends '99' represents endless	0 – 99 minutes	00
Settle	Time permitted after exit procedure is complete before system active (to permit exit route detectors to settle).	0 – 255 seconds	05
Double Knock	Length of filter period applied to zones with 'double knock' attribute	0 – 75 seconds	10
Pre-Alarm	Delays 'intruder' output signal if entry time has started **SEE NOTE ON PAGE 9-4.**	0 – 99 seconds	30
Line Fault	Duration of Telecom Line Fault before 'Line Fault' alarm triggered '250' represents endless	0 – 99 seconds	20
Set Fail	Time after which 'Set Fail' operation will be invoked if exit procedure not completed	0 – 99 seconds	40
Guard Code Alarm	Minimum time an alarm must have existed before a 'Guard code' will be accepted to unset.	0 – 10 minutes	03
Fire Siren Time	Cut off time for Fire alarm '99' represents endless	0 – 99 minutes	00

NOTE: 'Entry,' 'Exit' and 'Siren' timers are individually programmable for each area / level.

PROGRAMMING PROCEDURE:

With the display showing

```
CHANGE TIMERS?
```

Press YES

```
A Entry Time
      [030]
```

Adjust time as required, with numeric keys

Press YES

```
A Exit Time
      [030]
```

Repeat for each timer . . .

Press NO

```
CHANGE TIMERS?
```

Press NO

Moves to next menu item

(ix) SET DATE and TIME

ALL log entries and the system display include time and date. This may be programmed in Engineer OR Manager menu.

With the display showing

```
SET DATE & TIME?
```

Press YES

```
Year 00 - 98
          [00]
```

Adjust year as required (2000 to 2098), with numeric keys.

Press YES

```
Month (1-12)
          [01]
```

Adjust month as required with numeric keys.

Press YES

```
Day (1-31)
          [01]
```

Adjust date as required with numeric keys.

Press YES

```
Hours (0-23)
          [00]
```

Adjust hours as required (using 24-hour clock) with numeric keys.

Press YES

```
Minutes (0-59)
          [00]
```

Press YES

```
SET DATE & TIME?
```

Press NO

Moves to next menu item

(x) EXIT MODES

'TIMED' mode sets the system when the programmed exit time has expired, provided all zones on the exit route are clear. Any 'PTS' button fitted will be live also in this mode.

'FINAL DOOR' mode, the setting procedure will be completed when a zone programmed as 'Final Exit (FX)' is closed. This mode may also be used for 'lock set' operation: securing the lock completes setting procedure, unlocking starts entry time.

If the 'FX' zone is closed before the remainder of the exit route is clear, it will be 'stored' and acted on to complete the setting procedure only after the remainder of the exit route is clear.

'DOOR/TIMED' mode follows 'timed' operation, except that the timer will be overridden if a 'final exit' zone is opened and closed before the timer expires.

Note: NOT compliant with DD243:2002.

'PTS' mode will override the programmed exit time for the area in question, and will be endless.

Note: The PTS signal is NOT stored. If pressed before the exit route is clear, it will be ignored.

'QUICKSET' (5 seconds) is not programmable, but is applied automatically when an area is set from a Keypad located outside that area, and if intelligent setting.

'FAIL TO SET' procedure will apply if the setting procedure is not completed within a pre-set time – see 'SITE OPTIONS.'

'INTELLIGENT SET' permits the system to automatically switch between two setting patterns.

For 'area setting' systems, it will OMIT Area B when setting with a multiple area code including area 'B.'

'Level Setting' systems will switch over TO set level 'B.'

Care is required in the design of the exit route when intelligent set is to be used.

See pages 5-3; 13-33 for details.

NOTES:

If a Set Point programmed as 'IN' multiple areas is used, the highest priority programmed for those areas 'Timed' as lowest and 'PTS' as highest will apply. Any other areas being set will automatically 'Quickset.' (On entry, the system will respond to the highest entry time applicable to areas to which the entry door is programmed.)

If any zone **not** on the exit route is in active condition, the system will display 'Unable to Set' – and the zone(s) must be omitted to permit exit time to start, or cleared and setting procedure started again. Deviation from exit route once exit time has started will generate an alarm.

Care is required in setting up exit modes / volumes for 'common lobby' areas.

See also 'Strobe Confirm Set' in 'SITE OPTIONS.'

PROGRAMMING PROCEDURE:

With the display showing

```
EXIT MODES?
```

Press YES

```
A Exit mode
Timed        [0]
```

Use D to select between 'Timed [0]' 'Final Door [1]' 'PTS [2]' and 'Door/Timed [3] for area A.

Press YES

```
B Exit mode
 Timed       [0]
```

Repeat for area B, etc.

Press YES

```
EXIT MODES?
```

Press NO

Moves to next menu item

(xi) PROGRAMMING CODES and TAGS

Codes may be 4-, 5- or 6-digit, or proximity Tags. Using a 5- or 6-digit code will automatically block several possible 4-digit codes that clash with it. It is preferable to avoid mixing different length codes on the same system.

The areas valid for codes / tags are programmed individually. A 'Flexi-Set' option is available to permit selection of areas at the time of setting and unsetting where this is required.

CODE TYPES and NUMBERS

Product:	User/Manager Codes	Duress/Guard Codes
Euro-10	12	10
Euro-12	12	10
Euro-22	20	10
Euro-28	20	10
Euro-44 +	100	20
Euro-134	230	20
Euro-256	500	20
Plus Master Manager and Engineer codes		

NOTES:

Manager and User codes can **ONLY** be programmed through the MANAGER menu.

Duress and Guard Codes can be programmed **ONLY** through the Engineer menu.

CODE CAPABILITIES

Type	Functions	
USER Default 1234	Set and Unset System	*Program by MANAGER only*
	Also for Access Control and Ward Control functions	
MANAGER	Set and Unset System Also access to Manager menu functions	
MASTER MANAGER Default 2222	Set and Unset System Also access to Manager menu functions (see box below)	*Program by Manager OR Engineer*
ENGINEER Default 1111	Access to all Engineering functions, also set/unset system for test purposes.	*Program by ENGINEER only.*
DURESS	Unset System, generating silent 'Duress' or 'Hold Up' signal	
GUARD (Only on Euro-44+ and above)	Unset system, but only after an alarm, provided alarm has been active for a minimum time (programmable). Also Set System An output type is available to signal whenever this code is used.	

The Master Manager and Engineer Codes **CANNOT** be deleted.

From Software Version 3·1, the MASTER MANAGER CODE will NOT set or unset the system. It will solely give access to the Manager Menu. **NOTE:** during programming, it will appear to be valid to "set" the system, but will NOT do so.

PROGRAMMING PROCEDURE:

With the display showing

```
CHANGE CODES?
```

Press YES

```
Change Duress
Codes?
```

Press YES

```
User Number
                [01]
```

Use number keys to select code to be changed

```
User Code
              [      ]
```

Use number keys to enter new code, or present Tag to reader to programme this.

Display shows [******] if a code is already programmed, or [Tag] if a tag allocated: enter replacement code/tag, or press C to delete.

Press YES

```
Code Type
Duress      [2]
```

Use D to select between 'Duress [2]' and 'Guard Code [3]'

User and Manager codes can be programmed ONLY from the Manager menu.

Press YES

```
Areas
              [AB]
```

Use A and B to select Areas code is to be valid for. Whilst this is being done, the Area 'A' and 'B' keys will be illuminated to reflect the choice made

Press YES

```
User Set Options
Unset/Set    [0]
```

Use D to select between 'Unset/Set [0]' 'Unset only [1]' 'Set only [2]' and 'None [3]'

Press YES

```
Flexi-Set
No          [0]
```

Use D to select between 'No [0]' and 'YES [1]'

If selected, the user will be able to choose which area(s) are set/unset, from those the code is valid for.

If allocated to a tag, 'flexi-set' will only be operative when tag is presented at a Keypad.

Press YES

```
User Name
_
```

Enter text, as described on page 13-3

Press YES

```
User Number
              [01]
```

Repeat this procedure for additional codes, or

Press YES

```
Change Duress
Codes?
```

Press NO

Change Master Manager Code?

Press YES

Master Manager Code [******]

Use number keys to insert new Master code, then area, etc. information relevant to it.

Press NO

Change Master Manager Code?

Press NO

Change Engineer Code?

Press NO to reject option, or

Press YES

Engineer Code [******]

Use number keys to insert new Engineer code

Press YES

Change Engineer Code?

Press NO

CHANGE CODES?

Press NO

Moves to next menu item

NOTE: Euro-MERiDIAN will NOT accept tags intended for the older 'MERiDIAN' system, or vice versa.

(xii) VOLUME LEVELS

This applies to the system 'loudspeaker' output – levels generated at Keypads are programmed individually (see page 12-3).

Each system tone may be programmed to a pre-set volume level, between 0 (silent) and 7. The default settings are:

Intelligent Set	2
Chime tones	3
Exit tones	3
Entry tones	4
Tamper tones	6
Alarm tones	7

NOTE: At setting points, Level 1 is SILENT, with an audible chime to end exit time. This may be used in conjunction with Site Option "E/E Keypads Only" when 'Silent Set' is required.

With Version 3·11, this is also true at system loudspeakers

PROGRAMMING PROCEDURE:

With the display showing

VOLUME CONTROL?

Press YES

A Entry [4]

Use number keys to select level required.

Press YES

```
B Entry
                [4]
```

Use number keys to select level required.

Press YES

```
A Exit
                [3]
```

Use number keys to select level required

Press YES

```
B Exit
                [3]
```

Use number keys to select level required

Press YES

```
Alarm
                [7]
```

Use number keys to select level required

Press YES

```
Fire
                [7]
```

Use number keys to select level required

Press YES

```
Tamper
                [6]
```

Use number keys to select level required

Press YES

```
Day Alarm
                [7]
```

Use number keys to select level required

Press YES

```
Chime
                [3]
```

Use number keys to select level required

Press YES

```
Intelligent Set
                [2]
```

Use number keys to select level required

Press YES

```
VOLUME CONTROL?
```

Press NO

Moves to next menu item

'Intelligent Set' selection sets volume level for the start of exit tone when 'intelligent setting' is in use.

If Exit time is started from a Set Point programmed as 'IN' multiple areas, or Entry time from a door programmed to multiple areas, the HIGHER relevant level will apply. Thus it is possible to programme 'silent' exit for part of the system, with a normal level when fully setting.

Note: an option is available (see 'Site Options') that permits Entry and Exit tones to be generated by the Setting Points only.

(xiii) ALARM RESPONSES

Silent 1st Alarm

This prevents all system sounders from becoming live until an alarm has been 'confirmed' - eg to prevent noise interfering with audio confirmation equipment.

Disable Confirmation on entry

Used with a suitable FX, Unset or Keyswitch zone disables all sequential confirmation operation to satisfy certain options in DD243 (see page 9-7

Zones to confirm after entry

Accepts choice of 1 or 2 zones to trigger after expiration of entry time to qualify as 'sequentially confirmed' alarm.

ONLY THE "2" SETTING COMPLIES WITH DD243 : 2002.

Each area alarm response may be programmed with the option of 'graduated' functions, as can 'Day Alarm,' 'Fire,' 'Gas' and 'PA' alarms (note some alarm types are ONLY available on Euro-44+ and above). Graduation can be between 'Keypads,' 'Internal Sounders,' 'Sirens only,' 'Digi' and 'Confirm.'

The following options are available for each:

Starts at ____	Insert level at which alarm starts
Stops at ____	Insert level to which alarm graduates

The following additional options are available on AREA SETTING systems only:

Starts at ____ if area ____ set	Select higher starting point valid if additional
Starts at Digi if areas ____ set	Insert areas required to be set for response to be upgraded to 'digi' (leave blank if upgrade not required)

When graduated function is programmed, each step will apply for 15 seconds before the next graduated step.

PROGRAMMING PROCEDURE:

Note some alarm types are available only on Euro-44+ and above:

With the display showing

```
ALARM RESPONSE?
```

Press YES

```
Area A Starts at
Digi      [3]
```

Use D to select from 'Keypads [0]' 'Int Sounders [1]' 'Local [2]' and 'Digi [3]' eg

Press YES

```
Area A stops at
Confirm       [4]
```

Use D to select from 'Keypads [0]' 'Int Sounders [1]' 'Local [2]' 'Digi [3]' and 'Confirm [4]'

Press YES

```
Area B Starts at
Digi          [3]
```

Repeat for other areas.

Press YES

```
Fire Starts at
Digi          [3]
```

Repeat for FIRE alarms.

Press YES

```
Gas Starts at
Digi          [3]
```

Repeat for Gas alarms.

Press YES

```
PA Starts at
Digi          [3]
```

Repeat for PA alarms.

Press YES

```
Day Alarm Starts
Int Sounders [1]
```

Repeat for Day alarms.

The following steps are available ONLY on AREA SETTING systems:

Press YES

```
Start at
Digi          [3]
```

Permits first level of response upgrade. Identifies response system will immediately generate if any of the additional area(s) are set, as defined in next programming step. May be set for 'Internal Sounders' 'Sirens only' or 'Digi'

NOTE This upgrade will be operative if **ANY** of the areas selected here are set.

eg system may be programmed for Area A alarm response to start at keypad bleepers and graduate to 'sirens only,' but to be immediate 'sirens only' if area B also set, etc.

Use D to select option required

Press YES

```
if areas set
          [ - - - - ]
```

Use keys to select which area(s) are required to be set for upgrade level selected in previous step to apply.

Press YES

```
Start at
Confirm       [4]
```

```
if areas set
          [- - - -]
```

Repeat above steps to program second stage of upgrade - eg to graduate to 'Confirmed' response if ALL areas are set, etc.

Press YES

```
ALARM RESPONSE?
```

Press NO

Moves to next menu item

(xiv) PROGRAMMING OUTPUTS

Any output type may be programmed to any of the system outputs. Outputs MUST be used within their rated capacity – see Chapter 4 for full details.

STU pin output details are shown on pages 11-15/16.

Output types may be selected from the following list.

Please note especially the differences between "HOLD UP" "DURESS" and "ZONE PA" types,

Type		Default	Active	Restore
0000	Not Used		**Default setting**	
0001	Fire	STU 1	At Alarm	When valid code entered
0002	Hold Up ANY		At a PA or Duress Alarm	When valid code entered
0003	Intruder ANY	STU 3	At alarm, while system set	At first valid code entry OR at rearm (re-instatement) at end of 'confirm' time.
0004	Final Set ALL	STU 4	When system is FULLY set	At code entry to unset
0005	Misoperation ANY (Abort)	STU 5	When system silenced after any 'intruder' output triggered	After 2 minutes
0006	Confirmed ANY	STU 6	See description of operation on page 9-4	At next code entry
0007	Tamper		Any tamper alarm	At code entry to silence OR at rearm (re-instatement) at end of 'confirm' time.
0008	DURESS		At a Duress Alarm (ie from a Keypad)	When valid code entered
0009	ZONE PA ANY	STU 2	At Alarm on a PA ZONE	When valid code entered
	NOTE: This output type responds ONLY to alarms triggered by PA ZONES			
0010	Gas		At Alarm	When valid code entered
0011	Set Fail		If exit procedure is not completed in pre-set time.	At code entry to reset
0012	Entry Deviation		When deviation from entry route occurs, during entry time	At code entry to unset OR at rearm (re-instatement) at end of 'confirm' time.

Type		Default	Active	Restore
0013	Secure Intruder ANY		At alarm, after exit time started, until unset	At first valid code entry
0014	Siren ANY	ES 1	When alarm live	When alarm silenced, or when Siren timer expires
0015	French Siren ANY		When alarm live	When Siren timer has expired AND zone triggering alarm has cleared.
0016	Strobe ANY	ES 2	When alarm live	When alarm silenced, or when Strobe timer expires
0017	Omit Rearm any	STU 7	At rearm (re-instatement) at end of confirm time if a zone in fault isolated.	When system unset.
0018	Trouble		When 'Trouble' zone is triggered	When zone restores
0019	Can Set All (For use with Blockschloss)		If all zones are clear and no technical faults. Also during entry time	If fault exists, and when final set.
0020	Exit Starts ALL		At start of exit time to set LAST area	At code entry to unset FIRST area (ie no longer fully set)
	NOTE: For 'exit starts' to be entered in system logs, the site option 'Confirmed when...' must be set to 'exit start'			
0021	Exit Starts ANY		When exit time starts to set FIRST area	At code entry to unset LAST area
0022	Final Set ANY		When FIRST area is set	At code entry to unset LAST area
0031	Entry		Live during any Entry time	
0032	Exit		Live during any exit time	
0033	Entry/Exit		Live during any exit or entry time	
0034	Lights		When Exit or Entry Timer starts	20 seconds after Set / unset procedure completed.
0035 **	Follow Zone		When zone triggers	Dependent upon programming – see 25-2

This output type is available only on Euro-134/256 - see types 1001 upwards. Programming options include: 'Zone/Shunt List/Ward/Area to follow,' 'When set/unset/always' and 'Follow/Timed/Latched.'

Type	Default	Active	Restore
0036 **	Shunt Fault	For use with shunt zones – see Technical Note "Use of Wards and Shunt Zones."	

**** - NOTE: Types 035 and 036 will NOT function correctly if assigned to a ZEM or Output Module fitted software earlier than 1.1**

0037	Reset 1 (Viper Reset)	At code entry to set	After 3 seconds
0038	Reset 2 (Viper Set/Unset)	At code entry to set	When unset
		Re-triggers whenever an additional area is set.	
0039	PIR Latch 1	When set (and in Walk Test)	At alarm, or when unset
	NOTE: Restores and reactivates at 'reinstatement' at end of 'Confirm Time.'		
0040	PIR Latch 2	This is the inverse polarity to PIR Latch 1	
0051	Telecom Line Fault	When Line fault signalled by communicator	When fault clears
0052	Mains Fail	After pre-set time without mains power	On restore of mains
0053	Battery Fault	When battery disconnect or load fail detected	At next valid code entry
0054	Low Volts	At fault	When fault clears
0055	Technical Fault	When any system fault (including 'trouble' zone) occurs	When all faults clear
0056	General Fault	If technical fault, or zone fault occurs	When all faults cleared
0058	Guard Code Used	When 'guard' code accepted	After 60 seconds
0059	Engineer Access	When enter Engineer menu	When leave Engineer menu
0060	Reset Digi	At power up	Live for 45 seconds only

A repeating block of output types should be noted:

0202	Hold Up A	As 002 for Area/Level A events only
0203	Intruder A	As 003 for Area/Level A events only
0204	Final Set A	As 004 for Area/Level A events only
0206	Confirmed A	As 006 for Area/Level A events only (see page 9-4)
0209	ZONE PA A	As 009 for Area/Level A events only

Type	Default	Active	Restore
0213	Sec. Intr. A	As 013 for Area/Level A events only	
0214	Siren A	As 014 for Area/Level A events only	
0215	French Siren A	As 015 for Area/Level A events only	
0216	Strobe A	As 016 for Area/Level A events only	
0217	Omit rearm A	As 017 for Area/Level A events only	
0219	Can Set A	As 019 for Area/Level A events only	
0220	Exit Starts A	As 020 for Area/Level A events only	

Then the pattern from 201 to 220 repeats for each other area, so that

0221-240	Area/Level B
0241-260	Area/Level C
0261-280	Area/Level D
0281-300	Area 0
0301-320	Area 1
0321-340	Area 2
0341-360	Area 3
0361-380	Area 4
0381-400	Area 5
0401-420	Area 6
0421-440	Area 7
0441-460	Area 8
0461-480	Area 9

1xxx Follow zone xxx When zone xxx is activated When zone clears

ie add 1000 to the zone number to select the output required.

These output types are available throughout the range. See also type 035 (with additional programming options) when using the Euro-134 and 256.

NOTE: The following additional configurations are available, but are **NOT** programmable:

Area Sounder	At output 2 of TMZ (fixed as loudspeaker), areas selected in 'Assign Keypads' section - see page 13-15
Watchdog	At terminals A (Euro-44+ and above only), selected by jumper J1 – see 13-33

PROGRAMMING PROCEDURE:

Note: There may be a delay of up to 10 seconds in the display updating when jumping unused output type numbers during programming.

With the display showing

```
CHANGE OUTPUTS?
```

Press YES

```
End Station
Outputs?
```

Press NO to move to next set of outputs, or

Press YES

```
Output 1        [014]
Siren Any
```

Use number keys to select output type from table above, or D or B to scroll through available options

Press YES

```
Output 2        [016]
Strobe Any
```

Repeat for Outputs 2, 3 and 4

Press YES

```
STU OP 1
Fire            [01]
```

Repeat for STU OP 1 to 9

Press YES

```
End Station
Outputs?
```

Press NO

```
ZEM Outputs?
```

Press YES

```
ZEM Address
                [0]
```

Use number keys to select address required.

Press YES

```
Output 1        [00]
Not Used
```

Use number keys to select output type from table above, or D or B to scroll through available options

Repeat for Outputs 2, 3 and 4

Press YES

```
ZEM Address
                [0]
```

Use number keys to select next unit to programme, or

Press NO

```
ZEM Outputs?
```

Press NO

```
Output Module
Outputs?
```

Press YES

```
OP Mod Address
                [0]
```

Use number keys to select address required.

Press YES

```
Op Mod Installed
No              [0]
```

Use D to change to YES [1]

Press YES

```
Output 1        [00]
Not Used
```

Use number keys to select output type from table above, or D or B to scroll through available options

Repeat for Outputs 2, 3 and 4

Press YES

```
OP Mod Address
              [0]
```

Use number keys to select next unit to programme, or

Press NO

```
Output Module
Outputs?
```

Press NO

```
Keypad Outputs?
```

Press YES

```
Keypad Address
              [0]
```

Use number keys to select address required.

Press YES

```
Output 1      [00]
Not Used
```

Use number keys to select output type from table above, or D or B to scroll through available options

Press YES

```
Keypad Address
              [0]
```

Use number keys to select next Keypad to programme, or

Press NO

```
Keypad Outputs?
```

Press NO

```
Reader Outputs?
```

Press YES

```
Reader Address
              [0]
```

Use number keys to select address required

Press YES

```
Output 1      [00]
Not Used
```

Use number keys to select output type from table above, or D or B to scroll through available options

See NOTES 4 and 5 below

Repeat for Output 2

Press YES

```
Reader Address
              [0]
```

Use number keys to select next Set/Unset Tag Reader to programme, or

Press NO

```
Reader Outputs?
```

Press NO

```
CHANGE OUTPUTS?
```

Press NO

Moves to next menu item

NOTES:

1. To identify the communicator output channels to correspond to the STU output numbers, refer to table on page 11-15/16.

2. When programming 'follow zone' outputs (type 035), additional options require selection, see page 25-1,2 for full details.

3. Output configuration for Slot-in Digi-Modem is selected from 'Programme Digi-Modem' menu.

4. When a Set/Unset Tag Reader is programmed as a 'Ward Controller' the outputs will automatically be programmed for that Ward (see chapter 16).

5. A TMZ is programmed exactly as for a Tag Reader, EXCEPT that output 2 is **FIXED** as a loudspeaker output – regardless of any configuration allocated to it here. To programme the areas for which tones will be generated, see 'Assign Keypads and Tag Readers on 13-14.

Euro-44+ RELAY OUTPUT

This output (at terminals A) is available only on Euro-44+ (and above) End Stations. The output is configured using jumper JP1 on the printed circuit board. The options are:

Jumper at left (linking pins 1-2)	Follows ES output 3
Jumper at right (linking pins 2-3)	System watchdog

(xv) INTELLIGENT SETTING

LEVEL SETTING SYSTEMS

Setting the system in pattern 'A' will commence 'intelligent setting' of the whole system, with the exit tone at 'intelligent' volume level.

Activating the nominated zone during exit time will cause the system switch to pattern 'B.'

AREA SETTING SYSTEMS

(Euro-44+ and above)

Setting the system with any code including area B will initiate setting the areas for which the code/tag is valid, with the exit tone at 'intelligent' level.

Activating the nominated zone during exit time will cause the system to OMIT area B, and 'quick-set' the remaining areas.

NOTE: To be able to unset successfully, a detector must be sited to start entry time before unsetting.

The 'intelligent' detector must be sited to ensure that ALL potential users of the system are correctly detected. Some 'pet-immune' detectors are NOT suitable.

ALL SYSTEMS

The nominated 'Intelligent' zone is the one controlling access to the area that is to be UNPROTECTED when the system is set.

If an FX zone is triggered before the nominated zone, the system

will continue to set according to code/tag validity, using normal exit mode.

It is NOT possible to 'Intelligent set' other security patterns.

If 'intelligent set' is in use, the exit route MUST be designed so that an 'FX' detector can only be triggered when the system is definitely required to 'fully' set.

Programming Steps

With the display showing

```
INTELLIGENT SET?
```

Press YES

```
Intelligent
No          [0]
```

Use D to choose No [0] or Yes [1]

Press YES

```
Intelligent
Zone No     [  ]
```

Insert number of zone required to switch to 'part' setting.

Press YES

```
INTELLIGENT SET?
```

Press NO

Moves to next menu item

NOTES FOR AREA SETTING SYSTEMS:

Zones in Area B should NOT be programmed as 'intruder' types, but as 'ENTRY ROUTE' type. If this is not done, it will be impossible to commence intelligent setting with an Area B zone already active.

The system should be set up so that there is an 'ER-Area FX' zone not active in area B, which will be triggered before reaching the Keypad / tag Reader to unset the system. This Keypad / Tag Reader MUST be programmed as IN the same area(s) as the zones on the entry route – which will NOT include 'B.'

When full setting, area B will use its full timer, which may be prolonged after area A has set – especially if 'Final Door' or 'PTS' modes are used. This ensures that the user has ample time to reach area B if part setting is intended.

NOTE: To be able to unset successfully, a detector must be sited so that entry time is started before attempting to unset the system. If this is not done, additional areas will be set instead of unsetting.

(xvi) SITE OPTIONS

Option	Function
Set with Mains Fail	Permits the system to be set if a Mains fault is present. If selected as YES, the system can be set, even if 'Set with Technical Fault (below) is selected as 'NO.'
Set with Line Fault	Permits the system to be set if a Telecom Line fault is present.

Option	Function
Set with Technical Fault	Permits the system to be set if a Mains, Battery, Telecom Line, or other System fault is present.
Set Ward with Technical Fault	Permits a Ward to be set if a relevant Mains, Battery, Telecom Line, or other System fault is present
Set Fail = Alarm	If NO, exit time will continue until exit route is clear. If YES, a graduated alarm will be generated when 'Set Fail' timer expires, if exit procedure is still incomplete.
Do Battery Load Test	Programmes the system to perform a full load test of the battery at 7.00 am each day
Ward Mis-operation	Permits Misoperation (abort) signal to be generated without the entry of a valid code into the system when Blockschloss or Ward operated after an alarm.
Strobe Confirm	If selected, a 'STROBE ANY' output will be live for 5 seconds as the system sets. **Use with care, in view of potential security risk.**

Option	Function
Rearm Isolates	At rearm (reinstatement) at end of confirmation time, forces zone (NOT system tamper) causing unconfirmed alarm to be isolated, whether still in fault or not.
Leave Open Menu	Permits simple omission of omittable zones in fault at time of setting.
Code Stops Sound	Entry of a code which is valid for the system (but not for the area in which an alarm has been generated) will silence alarm, and generate a 'Misoperation signal' leaving area set, and other output conditions valid. **Use with care, in view of potential security risk.**
E/E Keypads only	Entry and Exit tones will sound on keypads only, NOT on system loudspeaker.
Use Level set	Permits Euro-44+ to function in 'Level setting' mode. See page 13-10
Confirmed When Final Set (or When exit starts)	Selects between Confirmation signal being available only when system finally set (mandatory for DD243:2002), or from start of exit time. NOTE: This option MUST be set for 'exit starts' to be entered in logs.

Option	Function
2 Key PA	Selects whether the '2-key PA' function at the Keypads is live, and if so, whether signalled only, audible only, or both. If used, the 1 and 7 keys, pressed simultaneously, will generate a Duress alarm.
Digi-Reply	Permits selection of inputs on 'plug-on' or loom connector to suit 'STU' (inc. Red Care Reset), 'Digicom' (inc. Fail to Communicate), 'Relay Interface monitoring' or 'not used.'
NOTE: This option MUST be set to 'STU' or 'Digi' in order for Line Fault, etc. Monitoring to function.	
INVERT STU O/Ps (version 3·1)	Changes outputs at STU pins, to trigger as "POSITIVE REMOVED" instead of the default "Positive applied."
Prevent PIN codes (Version 3·1)	If selected, Manager codes can ONLY program TAGs – NOT PIN codes. (Engineers can still programme PIN codes for DURESS etc purposes)

PROGRAMMING PROCEDURE:

With the display showing

```
SITE OPTIONS?
```

Press YES

```
Set Mains Fail?
Yes          [1]
```

Use D to select 'No [0]' or 'Yes [1]'

Repeat for other options to:

```
2 Key PA
None         [2]
```

Use D to select 'None [2],' 'Silent [0]' 'Noisy [1]' or 'Both [3]'

Note:

None = No response
Silent = Digi (Duress) response ONLY
Noisy = Audible response ONLY
Both = Digi AND audible response

Press YES

```
Digi Reply
None         [3]
```

Use D to select 'STU [0],' 'Digi [1]' or 'Relay [2]'

Press YES

```
SITE OPTIONS?
```

Press NO

Moves to next menu item

(xvii) ENGINEER RESET OPTIONS

Options are available as follows:

Option	Function
Engineer Reset of PA	Following a Hold Up, Zone PA or Duress alarm, an engineer must reset the system before it can be used again. This will not interfere with the generation of a Fire or Gas (emergency) alarm.
Engineer Reset of Intruder	Following an intruder alarm, an engineer must reset the system before it can be used again. This may be selected to operate either on generation of standard 'Intruder' signal, or 'Secure Intruder' signal. This will not interfere with the generation of an emergency alarm
Engineer Reset of Tamper	Following a Tamper alarm, an engineer must reset the system before it can be used again. This will not interfere with the generation of an emergency alarm
Engineer Reset of Soak	In the event of a zone with the 'soak' attribute triggering whilst the system is set, the system must be reset by an engineer before it can be used again. This will not interfere with the generation of an emergency alarm
Engineer Reset of Conf	Following sequentially confirmed alarm, an engineer must reset the system before it can be used again. This will not interfere with the generation of an emergency alarm
Anticode reset	Enables system to display an anticode whilst awaiting Engineer Reset, which can be used to generate a special reset code.

Engineer Reset may be performed by:

Use of Engineer code on site

Use of 'remote reset anticode' (if option enabled) to generate a special code via a PC programme to perform the reset (for one occasion only).

Red Care reset from the Alarm Receiving Centre

Download reset from a PC running 'Euro-InSite software'

PROGRAMMING PROCEDURE:

With the display showing

```
ENGINEER RESETS?
```

Press YES

```
Eng Reset PA
No        [0]
```

Use D to select 'No [0]' or 'Yes [1]'

Press YES

```
Eng Reset Int
No        [0]
```

Repeat for other Engineer Reset options to

```
ENGINEER RESETS?
```

Press NO

Moves to next menu item

(xviii) PROGRAMMING THE DIGI-MODEM

Programming information is shown in:

ARC Signalling	Chapter 21
Downloading	Chapter 22
SMS Messages	Chapter 23

THIS PAGE LEFT BLANK FOR NOTES

Chapter 14

TEST & DIAGNOSTIC FEATURES

This chapter outlines how to access the test and diagnostic features available on Euro-MERiDIAN

MANAGER TEST FACILITIES

The Manager menu gives access to 'SIREN TEST' and 'WALK TEST' facilities – see User Manual for details.

KEYPAD INDICATIONS TEST

With the system unset, pressing B for 5 seconds at any keypad will cause all LEDs at that Keypad to illuminate, and the LCD to scroll a display testing every pixel. The Keypad will revert to normal display approximately 10 seconds after the key is released.

BATTERY TEST

The system performs a check of the battery operation every 10 seconds, by dipping the power supply voltage momentarily, and measuring the system voltage. If the battery voltage measured is below 12.0v, or the battery fuse has failed, a 'BATTERY FAULT' warning will be generated.

BATTERY LOAD TEST

The system may be set up to perform an automatic 'Battery Load Test' at every power supply at 7.00 am each day. This will drop the power supply voltage below battery voltage, and (Euro-44+ and above only) switch a dummy resistive load onto the system whilst monitoring the system diagnostics.

This test will NOT take place if:

- The 'site option' is not selected;
- The End Station Siren and Strobe outputs are live;
- The system is in engineer mode;
- Any battery fault exists;
- Any mains fault exists.

If the test has already started, it will be aborted if any of these conditions, other than entry into Engineer menu, occur. If the test is aborted, it will NOT be performed until the next day.

This test is selected in 'SITE OPTIONS.' The test may also be performed as required, under engineer control.

ENGINEER SYSTEM SET

This permits the engineer to set / unset the system using his code.

With display showing

```
  Euro-MERiDIAN
Time        13:45
```

Enter Engineer code (default 1 1 1 1

```
SET SYSTEM?
```

Press YES

```
Set Areas
          [ABCD]
```

Select areas/level required to be set, noting that the Area keys will illuminate to reflect the choices made.

Press YES

```
Setting     [30]
Full
```

The system will commence setting, in 'Timed' mode. Exit time will count down, and system set.

```
  Euro-MERiDIAN
Time        13:48
```

Note: The system will give correct digicom response to the setting, and any resulting alarm.

On unsetting (with Engineer or User code), the system will revert to normal mode.

> If the system has been set by any other code, the Engineer code will NOT unset the system.

ENGINEER FORCE SET

This permits the engineer to set / unset the system using his code, forcing it to set despite zones in fault condition, and nominate which zones must be triggered to generate an alarm condition

With display showing

```
  Euro-MERiDIAN
Time        13:45
```

Enter Engineer code, default 1 1 1 1

```
SET SYSTEM?
```

Press NO

```
FORCE ARM ON 1st
ZONE?        [01]
```

Nominate number of zone to generate alarm once set, eg

Press 0 5 and YES

```
FORCE ARM ON 2nd
ZONE?        [01]
```

Nominate number of additional zone to generate alarm once set, eg

Press 1 3 and YES

```
Set Areas
          [AB ]
```

Select areas / level required to be set, noting that the Area keys will illuminate to reflect the choices made.

Press YES

```
Quick Setting . .
```

The system will set with minimum 5 second exit time.

```
Euro-MERiDIAN
Time        13:48
```

Note: The system will give correct communicator response to the setting, and any resulting alarms (including sequential confirmation, **if the selected zones make a valid combination**).

On unsetting (with Engineer or User code), the system will revert to normal mode.

If the system has been set by any other code, the Engineer code will NOT unset the system.

SOAK TESTING ZONES

Any zone (except 'Final Exit' types) may be placed on 'soak test' to prevent it from generating an alarm.

If the zone triggers whilst the area(s) in which it is located is set, it will indicate the activation (at unset) and enter details in the system log.

The 'SOAK CONTROL' facility is accessed through the 'Engineer Tests' menu. This provides means of identifying which zones are on soak, selecting and removing zones, as well as specifying the time that they are to be on test before automatic removal from test.

NOTE: If additional zones are placed on test without removing previously tested zones, they will be returned to soak test.

ENGINEER TEST FACILITIES

With display showing

```
ENGINEER TESTS?
```

Press YES

```
Walk Test?
```

Walk Test permits the detectors on the system to be tested

NOTE: It is necessary to exit engineering to 'set' programming changes before Walk Test or Outputs Test can be performed.

Press NO

```
Walk Test
Areas      [ABCD]
```

Use A B C and D to select area(s) to be tested. These keys will illuminate whilst selection is made.

Press YES

```
Walk Test
Front door
```

Display scrolls through all programmed zones in areas selected.

As test is conducted, system chimes, and zone tested is removed from scrolling display, until

```
Walk Test
Completed
```

Press NO

```
Walk Test?
```

Press NO

```
Soak Control?
```

Press YES

```
Soak Zones    [---]
```

Insert number of zone required to be on soak, eg 023, followed by YES

```
Soak Zones    [---]
Zone 023
```

Repeat for additional zones to be placed on soak, noting that all zones selected will scroll.

To remove a zone from the 'soak list' simply insert this number again and press YES.

On completion of selection, press NO

```
Soak Days Left
                [00]
```

This shows the number of days currently left on the soak timer. Change to number of days soak is to apply, eg 14, and press YES

```
Initial Soak
                [14]
```

This is the number of days that the soak timer will revert to in the event of a soak zone being triggered. Adjust as required and press YES

```
Soak Control?
```

Press NO

```
Test Siren?
```

Press YES to activate test – ALL outputs programmed to any Siren OR STROBE output configurations will trigger.

```
Testing Siren
...
```

Press NO

```
Do Batt Load
Test?
```

Battery Test permits the system batteries to be tested

Press YES to activate test – power supply voltage will drop to place system load onto battery. Results will be displayed in the form

```
Testing Battery
12.5v 1.1A
```

Press NO

```
Do Batt Load
Test?
```

Press NO

```
Test Outputs?
```

Outputs Tests permit the system outputs to be tested

Press YES

```
Output Test [  ]
```

Use A and B or number keys to select output type required, from table on page 13-27, eg '014 [Siren Any]'

Press YES

```
Output Test [014]
Siren Any
```

Press YES

```
Testing
Siren Any
```

ALL outputs programmed to that type will become live, INCLUDING those on slot-in Digi and plug-on STU.

Press NO

```
Output Type [  ]
```

Output(s) switches off.

Repeat as above for other output types, or

Press NO

```
Test Outputs?
```

Press NO

```
Test CHC
Communications?
```

See chapter 23 for details

Press NO

```
ENGINEER TESTS?
```

Press NO

Moves to next menu item

SYSTEM DIAGNOSTIC FACILITIES

The system diagnostics are available for all parts of the system, including any remote power supplies fitted.

The diagnostic resolution is:

VOLTS:	0.1v
CURRENT	0.01A

System voltage and current – at End Station and at each individual power supply. (There are no current readings on Euro-10/12).

System voltage – at each Keypad / Tag Reader

Battery condition and charge current – at End Station or any remote power supply (under development).

Output Diagnostics – for each output, with voltage and system current diagnostics.

Display zones – current status of all zones connected to a single system component, displayed in real time

iD Diagnostics – Slow scan mode (including display of actual mid voltage), line current, biscuit diagnostic current – at End Station and each Zone Expander

Calibration – calibrates End Station iD output voltages, also calibration of diagnostic reading of unit to correspond with a calibrated meter.

Note: Certain parts of the diagnostic readings from remote 'intelligent' power supplies are NOT yet available.

With display showing

```
DIAGNOSTICS
```

Press YES

```
View PSUs?
```

Press YES

```
End Station PSU
13.75v   0.22A
```

Display shows diagnostic readings for End Station power supply in quiescent state.

Press A to make all siren and strobe outputs live, so that display shows alarm current.

Press 0 to return to quiescent state.

Press YES

```
ZEM PSU [0]
13.65v 0.15A
```

Insert number of alternative Zone Expander with PSU fitted, and repeat above, as required

Or: Press NO

```
Op Mod PSU [0]
13.65v 0.15A
```

Repeat steps described above for Output Modules with PSUs fitted

Press NO

```
Keypad volts [0]
13.70v
```

Displays system voltage at indicated Keypad. Use number key to change to alternative Keypad

Press YES

```
Reader volts [0]
13.60v
```

Displays system voltage at indicated Tag Reader. Use number key to change to alternative Reader

Press YES

```
View PSUs?
```

Press NO

```
View Zones?
```

Press YES

```
EndStation Zones?
```

Press YES

```
CccOOccOccOccOc
OOcccFFFFFFFFFF
```

Display shows status of zones 1 – 30 (End Station iD zones) in real time, displaying the following codes:

- c: zone in normal state
- 0: zone in active state
- F: zone in Tamper state
- T: iD zone in 'Twin Device' state

Press YES

```
CccOOF
```

Display shows status of zones 31 – 36 (End Station EoL zones) in real time.

Press YES

```
Zone [001][01]
14mA 14mA iD
```

Display shows 'diagnostic' current, and 'switch' current respectively for system zone 001, biscuit 01.

OR:

```
Zone [031][1]
2K2 EOL
```

Display shows circuit resistance reading for system zone 031, EoL zone 1

Press YES

```
Slow Scan?
```

Note: This option only relevant if system includes iD zones.

Press YES

```
Slow scan
Is in progress . .
```

System ceases normal zone scanning to permit the normal (mid) voltage on the iD line to be measured with a standard meter.

Press YES

```
EndStation Zones?
```

Press NO

```
Zone Exp Zones?
```

Repeat above diagnostic steps for zones wired to each Zone Expander

Press NO

```
Keypad Zones?
```

Repeat above diagnostic steps for zones wired to each Keypad.

NOTE: diagnostics for Keypad zones are also available at that keypad - see 12-3

Press NO

```
Reader Zones?
```

Repeat above diagnostic steps for zones wired to each Tag Reader

Press NO

```
View Zones?
```

Press NO

```
Calibration?
```

Press YES

```
Calibration?
          [    ]
```

Key in code 2 0 0 0

```
Adjust iD mid
voltage      [+00]
```

System will provide steady 'mid' voltage, which can be checked at any point on the iD wiring connected to the End Station (see below for ZEMs).

To calibrate, disconnect all iD wiring from E/S terminals, place calibrated DVM across iD terminals (E3,4) and use D or B keys to adjust measured voltage to 6.50

Press YES

```
Adjust PSU
voltage      [+00]
```

Place calibrated DVM across Battery connectors WITH BATTERY REMOVED, and use D or B keys to adjust measured voltage to 13.7

Press YES

```
DIAGNOSTICS?
```

Press NO

Moves to next menu item

Calibrating ZEM iD output

Disconnect iD wiring from terminals, place calibrated DVM across iD terminals and press reset button on ZEM. Steady 'mid' voltage will be present at iD terminals (E3,4) for a few seconds, and may be adjusted (to 6.50 volts), using RV1.

THIS PAGE LEFT BLANK FOR NOTES

Chapter 15

SYSTEM LOGS

This chapter summarises the system log facilities of Euro-MERiDIAN.

Logs are fully date and time stamped, and may be viewed from either Engineer or Manager menus.

USER LOG includes all 'set' and 'unset' events and 'alarm' events. The code holder performing any operation may be identified by pressing the C key.

ACCESS LOG includes all Access Control and Guard Tour events (systems fitted MSX software only – see chapters 18 and 19).

ENGINEER LOG includes all system faults, together with details of engineer access, etc.

Within each log, the D key will move from one event to the next, starting at the most recent event. The B key will move similarly, but in the reverse direction.

To view additional detail, press the C key. If none is available, the display will move directly to the next log entry. Pressing the A key will return to the main screen for that entry.

Number of log entries:

Log:	User	Engineer	Access
Euro-10	300	100	-
Euro-12	300	100	-
Euro-22	300	100	-
Euro-28	300	100	-
Euro-44+	350	150	250
Euro-134	750	500	750
Euro-256	1000	1000	1000

Identification of Codes:

The codes used are identified by number, as follows:

Code	Identity
Engineer Code	Engineer Code
Master Manager Code	Master Manager Code
User (or Manager) 01 (001) – xxx	Codes 01 (001) to xxx programmed through Manager menu
Duress (or Guard) 01 – 10 (20)	Codes 01 to 10 (20) programmed through Engineer menu
"Zone switched"	Key or other switch used through zone input

Fault Codes

Fault codes shown in the system logs include a numeric code to identify the individual piece of equipment at which the fault is present, eg:

‘Device Failure 203,’
‘Mains Failure 400,’ etc.

The first digit identifies the device type, so that

1 = End Station
2 = Keypad
3 = Tag Reader
4 = Zone Expansion Module
5 = Output Module

The remaining digits identify the address of the individual device of that type. Thus

‘Device failure 203’
identifies the keypad that is addressed as ‘03,’

‘Mains Failure 400’
identifies the power supply fitted to Zone Expander address ‘00,’

etc.

For details of other fault indications, refer Appendix A.

VIEWING LOGS

The following summary illustrates the information available if C is used throughout. If the D key is used, the display will show only the items including the Date and Time.

With the display showing

```
REVIEW LOGS?
```

Press YES

```
User Log?
```

Press YES

```
15/09  14:15:24
AB UNSET
```

Press C

```
John Smith
User 004
```

Press C

```
15/09  14:15:08
A ENTRY
```

Press C

```
Back Door
Zone 12
```

Press C

```
15/09  10:42:18
ALARM
```

Press C

```
Lounge PIR
Zone 14
```

Press C

```
15/09  08:14:33
AB SET
```

Press C

```
15/09  08:14:20
OMITTED 05:
```

Press C

```
15/09 08:14:18
OMITTED 03:
```

Press C

```
15/09  08:14:15
AB EXIT
```

Press C

```
Mary Smith
Manager 002
```

Etc.

Press NO

```
Access Log?
```

Provides option to view Access Control log – not present on Euro-22 and 28. View as above.

Press NO

```
Engineer Log?
```

View this log in a similar way

Press NO

```
Clear Logs?
```

Use this option with care, only when absolutely certain that log information is no longer required, or when replacing NVM.

Press YES

```
Clear which log?
User log      [0]
```

Use B or D to select 0 = User log, 1 = Access log, 2 = Engineer log or 3 = All logs

Press YES

```
Clear logs code
          [     ]
```

Key in 2 0 0 0

```
Please wait,
clearing logs
```

```
Logs Cleared
```

Press NO

```
REVIEW LOGS?
```

Press NO

Moves to next menu item

System activities that will be entered in the logs include:

Unset	
Final Set	
Secure Set	
Only if 'Confirm when exit started' option selected	
Alarm on zone	
Tamper on zone	
Duress Code used	
2-key PA	
Code guessing	
Digi Triggered	
Alarm Silenced	
Clock set from	
Clock set to	
Manager Access	
Code deleted	
Code changed	
Engineer Access	and exit
System Restart	
Low volts	
Mains Fail	and OK
Battery Fault	and OK
Batt Charge	
Batt Critical	
Batt Load Fail	
D-M Line Fail	and Restore
D-M Fail to Communicate	
STU Line Fail	and Restore
STU Fail to Communicate	
Modem Fault	
Twin Device	
High Resistance	
iD Line Short	
Fuse x Fault	
Case Tamper	
SAB Tamper	
Tag at Reader	
Invalid Tag	
Device Fail	with identity
Set Failed	
Ward Unset	
Ward Set	
Ward zone Alarm	
Ward Silenced	
Zone omitted	
Zone Omit Rearm	
Log Cleared	
Red Care Reset	
Engineer Reset	
Anti-code Reset	
Zone on Soak	Zone off Soak
Soak Time *	
Clean Start	

* - daily log of timer counting down

Chapter 16

Ward Control and Shunt Zones

This Chapter examines two methods of extending the operating flexibility of the system beyond the basic Security levels or areas by additional partitioning techniques.

PARTITIONING THE SYSTEM

The primary means of partitioning the system is the use of the Security Patterns available in the systems. Depending upon the model of Euro-MERiDIAN in use, and programming option selected, this may be by:

A: LEVEL SETTING
The user will have a choice of setting the entire system, or a pre-programmed portion of it.

B: AREA SETTING
The user will have the option of setting any combination of independent areas, and of adding to or subtracting from the list of areas set at any given time.

In either of these modes, this flexibility may be extended by the use of WARDS and SHUNTS.

1. WARDS

A Ward is sub-division of an area, providing a degree of independent control so that in many systems it may be used as a separate partition.

Control is by means of a dedicated Set/Unset Tag Reader located OUTSIDE the ward area. No entry/exit route is available.

The number of Wards available is limited to the number of Setting Points not otherwise allocated as Keypads, Set/Unset Tag Readers or Access Control or Guard Tour Points. The maximum number is therefore:

Euro-10	3
Euro-12	3
Euro-22	3
Euro-28	3
Euro-44 +	7
Euro-134 *	15
Euro-256 *	16

* - Euro-44 + fitted with MSX Card.

Each ward may consist of any number of 'intruder' zones, all of which must be allocated to the same area. No zone may be allocated to more than one Ward.
Operation may be by proximity Tag, or by key (or other) switch wired into the first zone on the Tag Reader. Wards using switch

operation MUST be those on which the zones are live (ie as shown in the table on page 4-5).

Tags for Ward Control operation are programmed through the Manager Menu.

The Ward Controller provides 'Alarm' and 'Can Set' outputs dedicated to that Ward. It also provides relevant indications, including Set/Unset status, so should always be located adjacent to the controlling Keyswitch where this is used.

If the option 'Auto Readmits when set' is selected as 'ALWAYS' then the ward will always set when the area in which it located is set. If selected as 'NEVER' it will always require manual setting.

The Ward must ALWAYS be unset manually.

An additional option is available (within the 'SITE OPTIONS' menu, to permit a 'misoperation' (abort) signal to be generated by silencing an alarm at the Ward Controller.

Operation of the Ward

Action	Status	Notes
Normal (unset) status	Zones within Ward are inactive.	'Unset' indication lit.
Ward zone triggered	No response	
Attempt to set Ward with zone in fault	-	'Fault' LED flashes and intermittent tone to indicate 'cannot set.'
Set Ward with no faults	Ward sets (zones live)	'Unset' indication goes out.
Ward zone triggered	Alarm generated	'Alarm' LED lights, alarm tone generated.
Ward Controller unset	Ward Unsets	'Unset' indication lights.
Valid code entered at a Keypad whilst alarm running	Alarm silenced	Ward remains set.

Programming a Ward:

With the display showing

```
ASSIGN KEYPADS/
READERS?
```

Press YES

```
Address
                [0]
```

Select address required, eg

Press 4

```
Address
                [4]
```

Press YES

```
Type
Not Used        [2]
```

Use D to select 'Reader [1]'

Press YES

```
Reader is       [0]
Set Point
```

Use D to select 'Ward Control [1]'

```
Reader is       [1]
Ward Control
```

Press YES

```
Ward Zones _ _
None
```

Use number keys, followed by 'YES' to select the zones that are to be within the ward controlled. These will scroll continuously to identify those selected - eg to select zone 4, key 0 4 (or 0 0 4) and

Press YES

```
Ward Zones 04
Parts Store
```

Zones to be entered onto a 'Ward List' MUST already be enabled in programming as 'intruder' zones.

To delete a zone already present in the list, simply enter the zone number again.

When the Ward List is complete, to escape from the menu

Press NO

```
Auto Readmits
When Area Set [0]
```

Use D to select between 'When Area Set [0]' or 'Never [1]'

Selecting 'When Area Set' forces the Ward to set whenever the area in which it is located is set. Selecting 'Never' leaves the Ward to be set independently of the area in which it is located. Unset is always independent.

Press YES

```
Ward Control By
Tag             [0]
```

Use D to select between 'Tag [0]' or 'Zone [1]'

Select 'Tag' to programme the Ward to be controlled by presentation of a valid tag at the Reader.

Select 'Zone' selection to permit the Ward to be controlled by a Keyswitch. This Keyswitch must be wired into Input 1 of the controlling Tag Reader.

Press YES

```
Ward Control Name?
```

Permits name to be programmed for Ward Control Point to simplify locating the item.

Press YES

```
Ward Control Name
Reader 4
```

Enter text, as described on page 13-3.
This name will assist in programming tags to operate the ward, as described in the User manual.

Press YES

```
Address
                [0]
```

EITHER key in next keypad number to programme, or NO to exit function

Press NO

```
ASSIGN KEYPADS/
READERS?
```

Press NO to move to next menu item

NOTES: Outputs 1 and 2 of the Set/Unset Tag Reader will automatically be programmed to 'Ward Can Set' and 'Ward Alarm' respectively. Selecting 'Zone' operation (see 16-2) will automatically programme the first zone of the Tag Reader as a 'Ward Control' zone for connection of the controlling switch (Switch contacts OPEN = set, CLOSED = unset).

2. SHUNTS

Shunts are an alternative method of subdividing an area, but provide less sophistication than Wards.

The number of shunts available is as follows:

Euro-10	0	
Euro-12	0	
Euro-22	1	
Euro-28	1	
Euro-44 +	22	ie one half of number of zones on system
Euro-134 *	67	
Euro-256 *	128	

* - Euro-44 + fitted with MSX Card.

A shunt group may consist of any number of zones, including 'Intruder,' '24Hr Tamper' and 'Day alarm' types. These must all be allocated to the same area.

No zone may appear in more than one shunt list.

Control is by means of a Keyswitch (or alternative means of providing switch contacts) wired as a zone. If the switch contacts are OPEN, the zones in the shunt list are ACTIVE. Closing the switch contacts shunts – ie isolates – the zones. Selection of the 'NORMALLY OPEN' attribute when programming the zone will reverse this operation.

Indications of the status of the shunt may be provided by suitably programming a pair of outputs (see page 16-5/6).

Associated Outputs:

It is recommended that a 'Follow Zone' output and 'Shunt fault' output be programmed for each shunt in use.

The 'Follow Zone' output may be used to drive a visual indication that the shunt is applied and it is permissible to enter the area.

The 'Shunt Fault' output may be used to drive an audible indication (eg 12v DC buzzer) to provide the equivalent of an exit timer for the shunt, as described as 'shunt clear/fault' below.

Operation of the Shunt

Action	Status	Outputs
Shunt zone closed (shunted)	Zones within shunt list are inactive.	Follow zone output live
Shunted zone triggered	No response	
Shunt zone opened (unshunted)	-	Follow zone output clears. Shunt clear/fault output live for 10 seconds
After 10 seconds	Zones in shunt list active	Indications off.
Shunt zone opened with fault on a zone (attempting to unshunt)	-	Follow zone output clears. Shunt clear/fault output pulses till shunt re-set, or zone fault clears.
Zone fault clears	-	Shunt clear/fault output live for 10 seconds
After 10 seconds	Zones in shunt list active	Indications off.
Shunted zone triggered (whilst not shunted)	Normal zone response	(Note depends upon status of area in which shunt located.)

Note: Closing the shunt (shunting) whilst the system is in alarm condition will NOT silence the alarm, even if the alarm was generated within the shunted area.

Programming the Shunt Zone and List.

With the display showing

```
CHANGE ZONES?
```

Press YES

```
Zone Number
        [01]
```

Select zone number required, and press YES

```
Zone Type
Isolated    [00]
```

Select zone type 18 and

Press YES

```
Zone Type
Shunt     [18]
```

Press YES

```
Shunt List __
None
```

Use number keys, followed by 'YES' to select the zones that are to be within the shunt list. These will scroll continuously to identify those selected - eg to select zone 7, key 0 7 (or 0 0 7) and

Press YES

```
Shunt List 07
Canteen Door
```

Zones to be entered onto a 'Shunt List' MUST already be enabled in programming.

To delete a zone already present in the list, simply enter the zone number again.

When the Shunt List is complete, escape from the menu by

Pressing NO

```
Zone Name?
```

Press YES

```
Enter Zone Name
Zone 01
```

Enter text, as described on page 13-3

```
Zone Number
                [01]
```

EITHER key in next zone number to programme, or NO to exit function

Press NO

```
CHANGE ZONES?
```

Press NO

Moves to next menu item

Programming the Outputs

With the display showing

```
CHANGE OUTPUTS?
```

Press YES

```
End Station
Outputs?
```

Press NO to move to appropriate set of outputs, eg Output module, and select output number required:

Press YES

```
Output 3        [00]
Not Used
```

Select as FOLLOW ZONE output type 10xx where xx is the number of the programmed Shunt zone, eg 1018 for zone 18.

On Euro-134 and 256, type 035 may alternatively be used, as follows:

```
Output 4        [035]
Follow Zone
```

Press YES

```
Follow Type
Follow          [0]
```

Press YES

(ignore alternative settings)

```
Follow What?
Zone            [0]
```

Use D to select "Shunt List [1]"

Press YES

```
Follow When?
When Set        [0]
```

Use D to select "Always [2]"

Press YES

```
Shunt to Follow
                [001]
```

Enter the number of the zone controlling the shunt list.

Press YES

The 'Follow Zone' output is now programmed.

FOR ALL SYSTEMS:
To programme the 'shunt fault' output:

```
Output 4        [000]
Not Used
```

Select output type 026

```
Output 4        [026]
Shunt Fault
```

Press YES

```
Select Shunt
zone [01]
```

Select number of Shunt zone, eg 18 (or 018) and press YES

This step is not required on Euro-22 and 28.

Repeat for additional shunts, or press NO to

```
CHANGE OUTPUTS?
```

Press NO

Moves to next item

THIS PAGE LEFT BLANK FOR NOTES

Chapter 17

Use of Output Modules

This Chapter outlines the use of Output Modules in the expansion of Euro-MERiDIAN systems

Output Modules may be added to Euro-MERiDIAN to extend its capability. Each module has 16 programmable outputs. The number of modules that may be used is

Euro-10	1
Euro-12	1
Euro-22	1
Euro-28	1
Euro-44 +	2
Euro-134 *	8
Euro-256 *	8

* - These are simply Euro-44 + fitted with MSX Cards.

INSTALLATION

Output modules may be located at any convenient location.

They may be mounted independently, or plugged onto Euro-MERiDIAN Intelligent Power Supplies.

Ensure that individual outputs, and the module, are not overloaded; and that adequate power is available.

ADDRESSING THE UNITS

Each module must be correctly addressed before being powered up. This should be done as follows:

Address	Switch 1	Switch 2	Switch 4
0	Closed	Closed	Closed
1	OPEN	Closed	Closed
2	Closed	OPEN	Closed
3	OPEN	OPEN	Closed
4	Closed	Closed	OPEN
5	OPEN	Closed	OPEN
6	Closed	OPEN	OPEN
7	OPEN	OPEN	OPEN

Switch 8 should always be CLOSED

Output modules are addressed in their own number sequence, not to be confused with those for Zone Expansion Modules, Keypads, etc.

TERMINAL CONNECTIONS

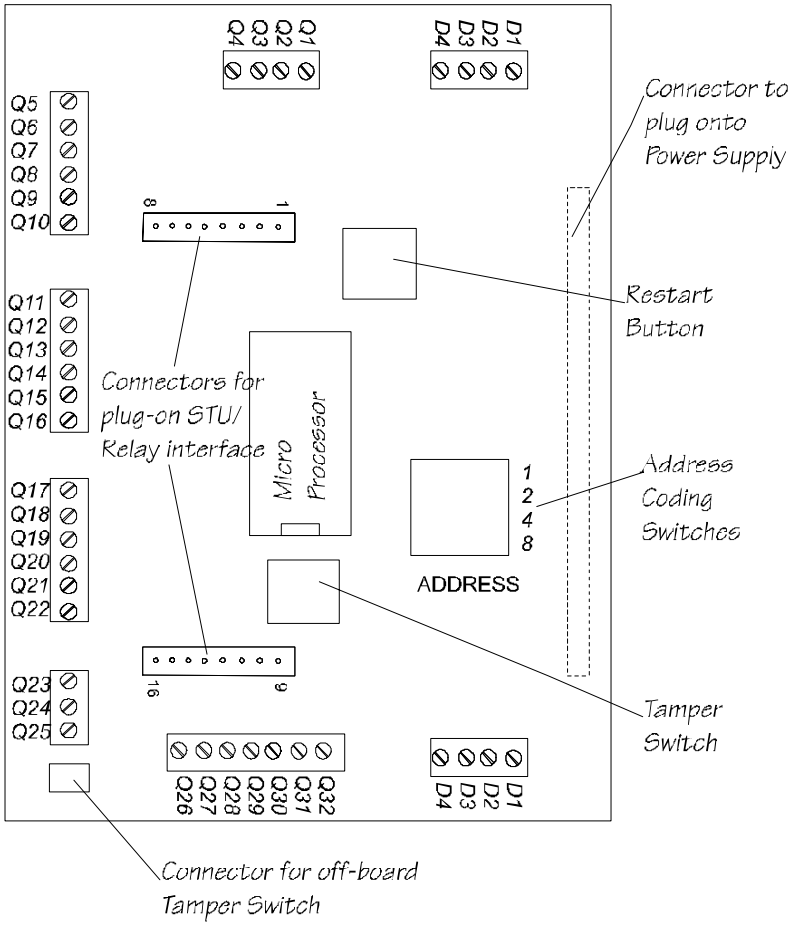

If the Output Module is plugged onto an Intelligent Power Supply, all connections are automatically made to draw current from the power supply, and to use the system diagnostic capabilities to control the power supply.

A set of pins is provided that will accept a plug-on relay interface to provide higher current drive outputs.

These pins are also compatible with industry-standard STUs, etc. However, the INPUTS from the device are NOT currently monitored.

An alternative module will be available with ONLY the STU pin outputs.

Terminal Allocations

D RS.485

1	0v
2	+ 12v
3	'A'
4	'B'

Q Outputs

1	Output 1 -
3	Output 2 -
5	Output 3 -
7	Output 4 -
9	Output 5 -
11	Output 6 -
13	Output 7 -
15	Output 8 -
17	Output 9 -
19	Output 10 -
21	Output 11 -
23	Output 12 -
25	Output 13 -
27	Output 14 -
29	Output 15 -
31	Output 16 -

All even numbered terminals are + 12v

G **(ON PSU PCB)**

AC Input

1	Mains Earth
2	AC in
3	AC in

WIRING THE UNIT

RS-485 Wiring:

The unit must be wired to the RS-485 keypad bus, exactly as described for keypads on page 11-3.

NOTES:

Two sets of RS-485 terminals are provided, to simplify wiring, especially if adding to existing wiring.

If the unit is plugged onto a power supply, and hence powered from it, terminal D2 (+12v) must NOT be connected to the system End Station or any item connected to another power supply, thus:

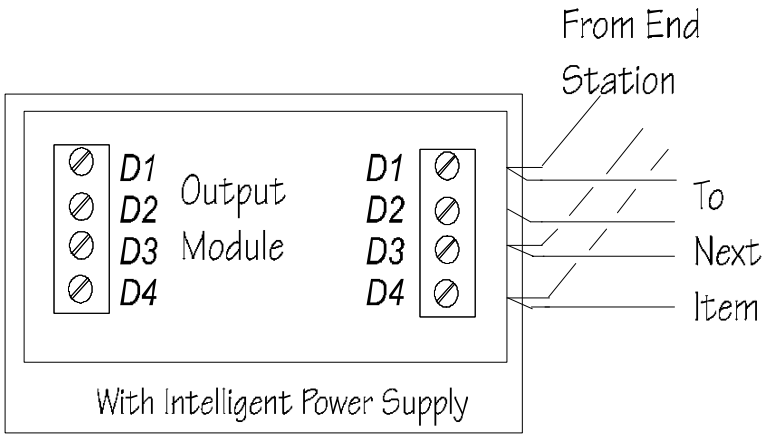

Outputs Wiring:

Individual outputs are capable of driving up to 250mA, subject to an overall limit of 400mA per module.

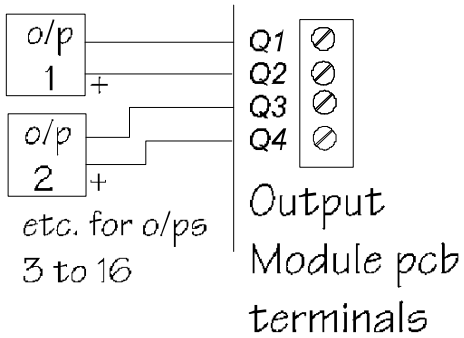

Note: If plugged onto a power supply, it is possible to rate ONE individual output at 800mA, by wiring the +12v for that output from terminal D2. Ensure that sufficient power is available to power the equipment being switched from the unit.

NOTE: For details of 'STU' pin connections, refer page 11-16.

PROGRAMMING THE OUTPUTS

Any output type may be programmed to any output.

The range of output types available is shown on page 13-27. Note that some types are available on Euro-44+ and above only.

PROGRAMMING PROCEDURE:

With the display showing:

```
CHANGE OUTPUTS?
```

Press YES

```
End Station
Outputs?
```

Press NO until

```
Output Module
Outputs?
```

Press YES

```
OP Mod Address
              [0]
```

Use number keys to select address required.

Press YES

```
Output 1        [00]
Not Used
```

Use number keys to select output type from table above, or D or B to scroll through available options

Press YES

Repeat for outputs 2 to 16

Press YES

```
OP Mod Address
[0]
```

Use number keys to select next unit to programme, or

Press NO

```
Output Module
Outputs?
```

Press NO

```
CHANGE OUTPUTS?
```

Press NO

Moves to next menu item

NOTE: The 'STU' pin outputs programme as Outputs 1 to 8.

Chapter 18

ACCESS CONTROL with Euro-MERiDIAN

This chapter outlines how to install and programme the Access Control facility for a Euro-MERiDIAN system.

Access Control Facilities are ONLY available on Euro-44+ and above.

> The Access Control installation must comply with any requirements of the local Fire Officer.

Attention is also drawn to BSIA Code of Practice BSIA.107 "Planning, Installation and Maintenance of Access Control Systems," and NACOSS Code of Practice NACP.30 "Access Control Systems."

A: FEATURES

Euro-MERiDIAN provides Access Control facilities integrated into the alarm system, incorporating the following features:

Number of doors	1 per door station, max (dependent upon number of other control devices fitted):

Euro-44+	Euro-134	Euro-256
7	15	16

Reader head	Fully sealed to IP66 for exterior use.
Lock release	Suitable for any type, including Car Park barriers. Voltage (12v DC) or volt-free (suitable for 12v or 24v DC, or AC) outputs available.
Tags	Proximity tags shared with system operation. Max:

Euro-44+	Euro-134	Euro-256
100	230	500

Lock Open	Timer programmable individually 0 - 250 seconds.
Door Open	Timer programmable individually 0 - 250 seconds.
Door monitor	Yes - may be integrated into alarm system
Local alarm	Yes - changeover relay contacts.
Request to exit	Input for 'normally open' push button
Power Supply	Integrated with door station. Can power second station for two-way access.

B: SYSTEM ARCHITECTURE

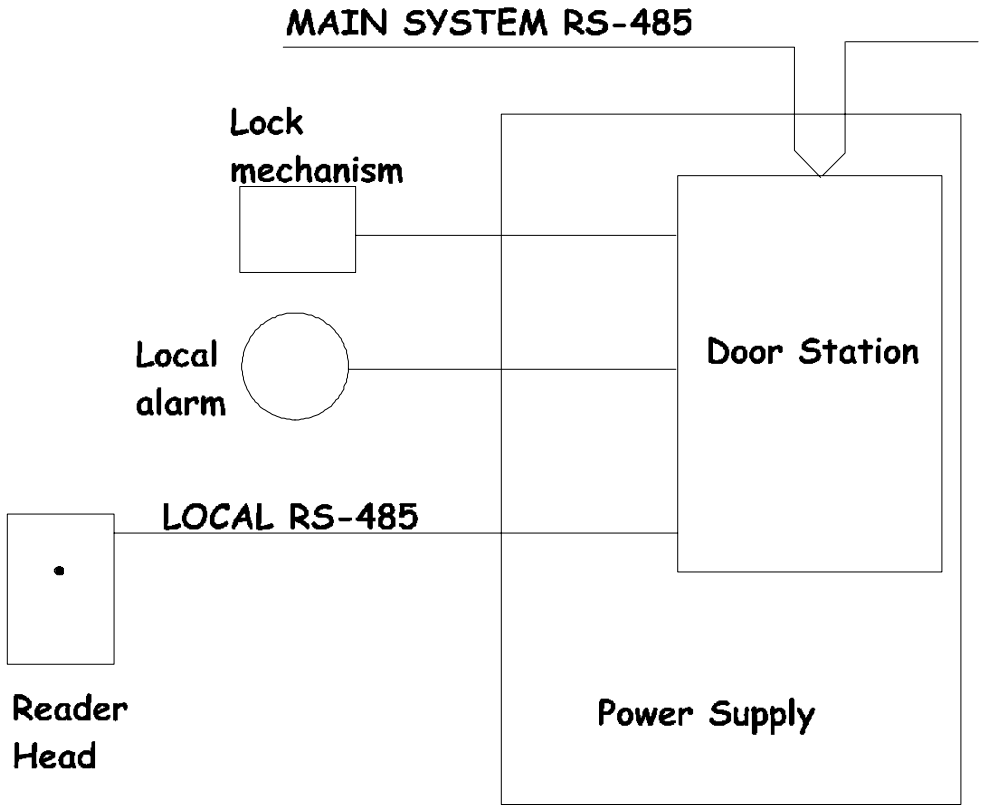

C: INSTALLATION

The general installation notes (see Chapter 10) are applicable when installing the Access Control components. Please note the following additional information:

The Access Control Door Station unit (EUR-063) is supplied with the Control PCB plugged onto an 'Intelligent Power Supply.' The unit is wired to the system RS-485 bus. Connections are provided for control of a single door.

The Power Supply is rated as follows:

Housing	Contin-uous	Peak (20 mins)	Peak (15 secs)
"3" (standard)	1A DC	1.5A DC	2.5A DC
"4" (special order)	1.5A DC	2.5A DC	-

After mounting the reader unit, the supplied label should be carefully applied, thus concealing the fixings.

D: The Door Station

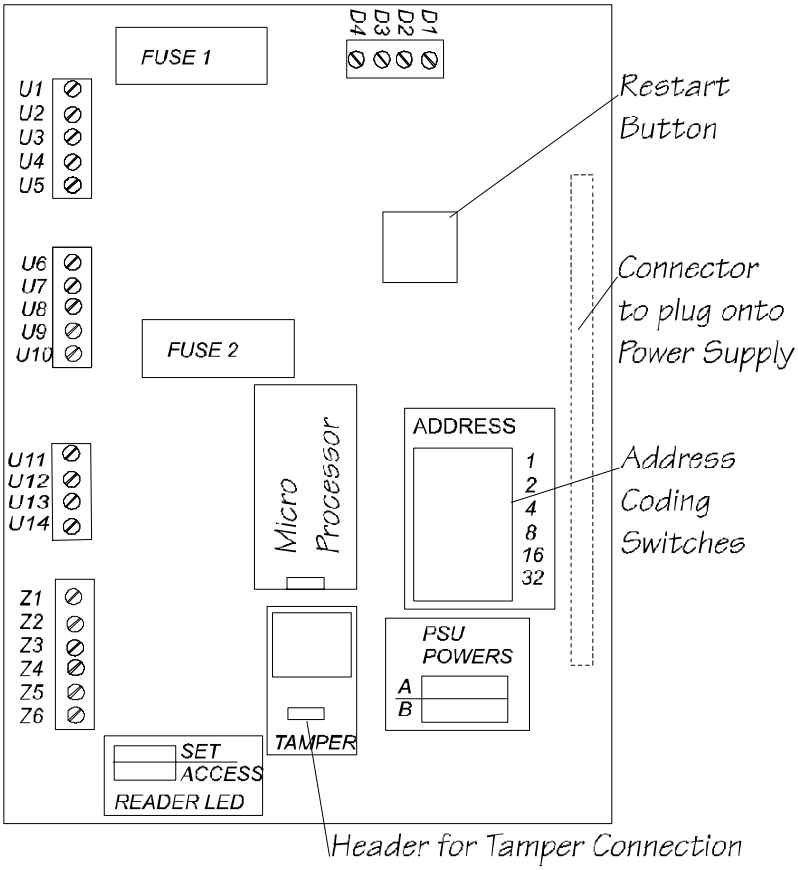

Terminal Allocations

D	RS.485	
1	0v	
2	+12v	
3	'A'	
4	'B'	
U	Outputs etc.	
1	Lock	0v
2	Lock	+12v
3	Lock	NC
4	Lock	C
5	Lock	NO
6	Supply	0v
7	Supply	12v
8	Alarm	NC
9	Alarm	C
10	Alarm	NO
11/12	RTE (exit button)	
13/14	Door Mon.	
Z	Reader Head	
1	BLACK	(0v)
2	RED	(+12v)
3	BROWN	
4	BLUE	
5	GREEN	
6	WHITE	

Fuse values:
F1, F2 3.15A

Note: Before powering up, the Door Station must be addressed, using the coding switches – open switches to add up to the address required.

NOTE issue 2 PCB shown

Issue 1 Door Station pcbs do NOT have the full range of options, nor provide full diagnostic features.

All connections to the Intelligent Power Supply are automatically made to power the unit and lock mechanism from the local power supply, and use the system diagnostic capabilities to control the power supply.

In default mode, the Door Station communications section is powered from the local Power Supply, through the plug-on connections.

Do NOT therefore connect terminal D2 to the RS.485 network.

E: WIRING

RS.485 Communications

Terminals D1,3,4 should be wired to the Euro-MERiDIAN system as shown in Chapter 11.

NOTE: In default mode, the Door Station communications section is powered from the local Power Supply. The D2 connection should NOT therefore be used.

If a second Door Station is being wired from the power supply to provide two-way access control through a door, the full D1,2,3,4 connection is required to the second unit.

The Access Reader

NOTE: The Access Reader cable must be kept separate from the lock supply connections.

The captive cable from the Access Reader head may be extended to a maximum of 100 metres. Recommended Cable type is TWISTED PAIR. If a screen is present, this should be terminated to mains earth at the Door Station only.

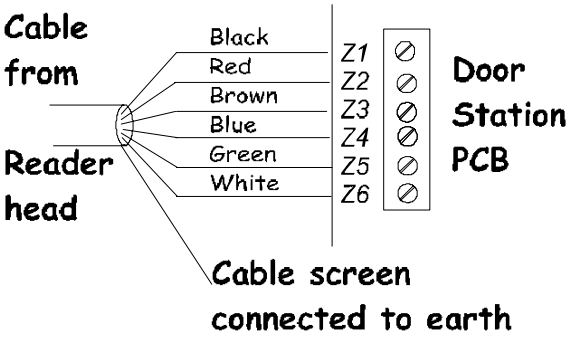

Care should be taken to ensure that there is no earth leakage on this cable.

Lock Supply Connections

The wiring to the lock mechanism MUST be kept separate from that for the Access Reader head.

Use of properly terminated screened cables for BOTH connections may provide sufficient isolation, separation is preferred.

DC Lock mechanisms MUST have back-emf protection diode correctly fitted as specified by the manufacturer.

a) Using switched 12v supply

Max current: 2.5 amps for 15 seconds.

Voltage is permanently present, and switched OFF to release the mechanism.

Note the use of an emergency break glass unit to release the mechanism in the event of a fire or other emergency.

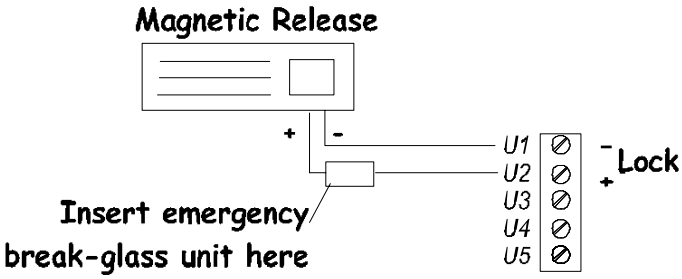

b) Using volt-free relay contacts

Relay capable of switching up to 50 volts, up to 10 amps. This may be used to switch the internal supply, or any suitable external supply, including AC voltages.

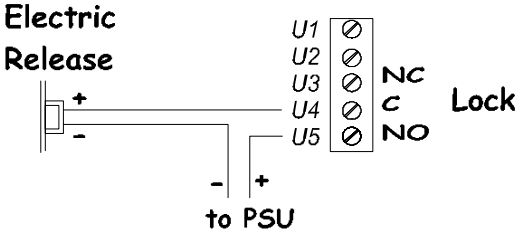

May be used to switch AC

Shown wired 'power to release'
For 'power to lock' use 'NC'

Alarm Output

Relay capable of switching up to 50 volts, up to 10 amps. This may be used to switch the internal supply, or any suitable external supply, including AC voltages.

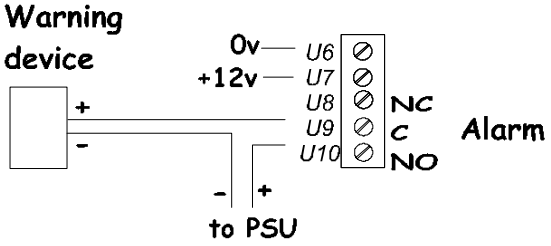

Shown wired 'power to sound'
Alternatively, 'NC' may be used.

'Request to Exit' Button and Door Monitoring Connections

If an electromagnetic lock or solenoid bolt is used, a RTE device (exit button) is required to permit exit. This is activated when the normally open push button is momentarily closed.

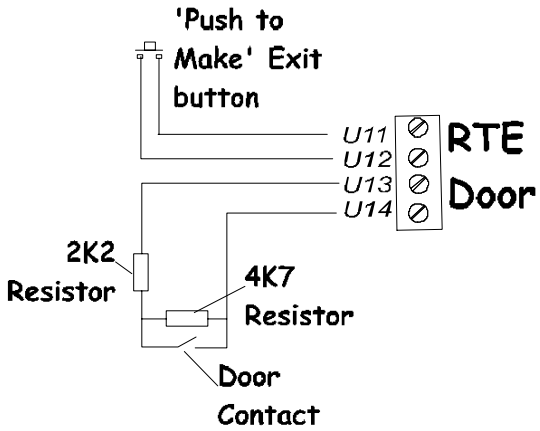

The Door Monitoring facility may use a switch contact on a monitored door release, but a separate security door contact is recommended.

NOTE: Each Door Station has these connections available.

Automatic Release from an Alarm Output

A Fire Alarm 'Auxiliary' relay output may be wired in place of the Exit Button shown in the diagram above.

Alternatively, any appropriate output on the Euro-MERiDIAN system may be used to drive 0v directly into terminal U12 to achieve the same functionality.

F: Addressing the Units

The door is addressed by means of the coding switches on the Door Station, before the system is powered up, as follows:

Switch / Address	1	2	4	8	16
00	C	C	C	C	C
01	O	C	C	C	C
02	C	O	C	C	C
03	O	O	C	C	C
04	C	C	O	C	C
05	O	C	O	C	C
06	C	O	O	C	C
07	O	O	O	C	C
08	C	C	C	O	C
09	O	C	C	O	C
10	C	O	C	O	C
11	O	O	C	O	C
12	C	C	O	O	C
13	O	C	O	O	C
14	C	O	O	O	C
15	O	O	O	O	C

C denotes switch closed,
O denotes open.

Switch 16 should always be closed.

G: Programming the Access Control

(i) Programming the Access Control unit:

With the display showing

```
ASSIGN KEYPADS/
READERS?
```

Press YES

```
Address
                [00]
```

Use number keys (or D) to select address, eg 0 3

Press YES

```
Type
Keypad          [3]
```

Use D or 1 to select 'Reader [1]'

Press YES

```
Reader Is
Set Point       [0]
```

Use D or 2 to select 'Access Control [2]'

Press YES

```
Lock Open Time
                [005]
```

Use number keys to programme time door release is to be active when valid tag presented (max 250 secs).

Press YES

```
Door Open Time
                [010]
```

Use number keys to programme time door is permitted to be open before triggering an alarm (max 250 secs).

Press YES

```
Door Contact No.
Disabled [999]
```

Use number keys to programme the number of the zone used to monitor the door. NOTE: This zone number MUST be selected for the door monitoring to function, number '999' disables the monitoring for this door.

Press YES

```
Access Ctrl
Name?
```

Permits a name to be allocated to the door

Press YES

```
Access Ctrl Name
Reader 3
```

Programme text entry, as described on page 13-3

Press YES

```
Address
[03]
```

Programme next Keypad / Tag Reader, or Press NO to escape to main menu.

(ii) Programming the Zone

Unless the zone number is programmed as '999,' the door will ALWAYS be monitored by the door station, and generate a local alarm (via the Door Station 'alarm' terminals) in the event of the door being forced, or the 'door open' time being exceeded.

After assigning the zone number required for door monitoring, this zone must be programmed through the 'change zones' menu (see 13-8) as for other zones. Response to the zone by the alarm system will depend upon the programming, as follows:

Zone type	Valid door open (ie valid tag or 'request to exit')	Door forced (ie no valid tag, nor 'request to exit')
Final Exit (FX)	Starts entry time, if system set	Tamper
Switcher	No response	Tamper
All other types	No response	Normal zone response

'Follow Zone' outputs may be programmed as required.

NOTES: If zone is programmed as 'isolated' then monitoring will be SOLELY at the Door Station. If the zone is to be monitored by the alarm system ONLY, it should be wired direct to the system, NOT via the Door Station.

H: SYSTEM LOGS

The system will log in the ACCESS log, in the form:

```
15/09  14:15:24
Tag at Reader
```

Press C

```
John Smith
User 004
```

Press C

```
Device 07
Despatch Door
```

Press C

```
15/09  14:23:12
Tag at Reader
```

etc.

J: PROGRAMMING TAGS

Tags are programmed through the normal 'Programme Codes' routine in MANAGER menu.

Note relevant programming options:

```
User Set Options
None          [3]
```

Option 'None [3]' identifies that tag will NOT also set/unset the system

If alternative options [1] or [2] are selected, tag can also be used (on suitable Keypads/Set-Unset Tag Readers) to control alarm system.

```
Reader [4]
Reader 4
```

Permits selection of which Access Readers the tag will be valid at.

Bottom line of display will show reader identification name which has been programmed. Defaults to lowest number reader, change as required, then press YES. Figure in brackets should be changed to select an alternative or additional reader, as required. Total list allocated will scroll. Press YES again with the same reader showing to delete the reader.

Press NO on completion of selection, to move to next option.

K: Access Control Facility and DD243

Certain unsetting options compliant with DD243:2002 may be set up in conjunction with the access control system.

Unlocking the initial entry door unsets the system: use relay to trigger zone programmed as "unset."

Unlocking the initial entry door disables confirmation: use relay to trip zone programmed as "FX" with "Disable Confirmation on entry" option selected in Alarm Response menu.

Chapter 19

GUARD TOUR SYSTEMS WITH Euro-MERiDIAN

This chapter outlines a further application for the Euro-MERiDIAN system.

It is possible to use the Access Control features of Euro-MERiDIAN to install a 'Guard Tour' system. Guards touring the site can use a programmed tag at suitable readers to log their progress, by guard name, location, date and time.

This facility is available only on Euro-44+ and above.

A: Features

The number of points available is dependent upon the number of control points otherwise in use on the system:

Keypads + Set/Unset Readers + Ward Controllers + Access Controllers + Guard Tour points.

The maximum number available is:

Euro-44+:	7
Euro-134:	15
Euro-256:	16

Tour points may be located internally or externally by selection of appropriate components:

EUR-028	Internal Guard Tour Tag Reader
EUR-027	External IP66 Tag Reader and Guard Tour Station

The Guard Tour Station may be plugged onto a Euro-MERiDIAN Intelligent Power Supply, if required.

NOTE: It is NOT possible at this time to provide "time overdue" or "out of time" warnings.

B: Addressing the units

The units should be addressed between 1 and 16, as described on page 12-1. No other control devices (Keypads, Set/Unset Readers, Access Controllers, etc.) may duplicate these addresses.

C: Installing and Wiring the units

The installation and Wiring of INTERNAL units is identical to that for Set / Unset Tag Readers, as described in Chapter 11.

Installation and wiring of the EXTERNAL reader units is identical to that for Access Control units described in Chapter 18, except that they will not normally be used with local power supplies (therefore, unless a local power supply is used, terminal D2 must be connected to the system RS-485 'bus).

D: Programming the units

Units are programmed in the same way as Access Control units (see chapter 18). Thus, in the "Assign Keypads/Readers" menu:

Select	Address Reader Access Controller
Ignore	'Lock open' 'Door open' and 'Door Contact No.' options.
Assign	a distinctive device name to be the location of the Guard Tour point – eg 'GT-Stores,' etc.

The LED on the external reader head will be driven by OUTPUT 1 at the relevant Tag Reader address, and should be programmed accordingly (eg a relevant 'Exit Start' type).

Tags to be used should be programmed through the MANAGER menu, in the same way as 'Access Control' tags (see 18-8) – ensuring that 'none' is selected in the user set option sub-menu.

Do NOT attempt to use "Guard" codes (programmable in Engineer menu) for this purpose – these provide an entirely different function!

E: SYSTEM LOGS

The system will log in the ACCESS log, in the form:

```
15/09  14:15:24
Tag at Reader
```

Press C

```
John Smith
User 004
```

Press C

```
Device 07
GT-Stores
```

Press C

```
15/09  14:23:12
Tag at Reader
```

etc.

Chapter 20

Installing the Euro-COM 9600 DigiModem

This chapter provides the information needed to install the Euro-COM 9600 DigiModem in accordance with appropriate regulations.

This product complies with all requirements of the European 'R&TTE Directive' 1999/5/EC for connection to the PSTN. It is approved for use throughout the EU, see 'Declaration of Conformity' on next page.

CE 168

This equipment is thus suitable for single terminal connection to the public switched telephone network (PSTN) throughout Europe. However, due to the differences between the individual PSTNs provided in different countries - and even within a country - the approval does not, of itself, give an unconditional assurance of successful operation on every PSTN network, or compatibility with every possible ring cadence.

Should any difficulties be experienced, or it is required to use the unit on another network, please contact your supplier in the first instance.

IMPORTANT NOTICE

The Declaration of Conformity to European R&TTE Directive for this product is valid ONLY when it is correctly installed as described in these instructions.

These instructions are designed to ensure that SAFETY regulations are met, as well as functional and programming aspects. It is therefore essential that these are followed exactly; in particular the telephone cable must be routed and connected correctly.

The product declaration is for use with the following services ONLY:

Multi-Frequency signalling
Auto-Calling
Auto-Clearing

The declaration will be void if used for any other purpose.

Form CD.209
Issue 3

CASTLE care tech

PRODUCT DECLARATION OF CONFORMITY

Manufacturer:	Castle Care-Tech Ltd. North Street Winkfield Nr. Windsor Berkshire SL4 4SY England
Details of Equipment:	Euro-COM 9600 Security Communicator / Modem
Declaration:	Under our sole responsibility, we hereby declare that the product detailed above conforms with the essential requirements of the Directives identified below, having been tested in accordance with the standards mentioned:
EMC Directive 89/336/EC as amended by 92/31/EC	EN.50130-4 for Immunity EN.50081 Part 1 for Emissions
Low Voltage Directive 73/23/EC as amended by 93/68/EC	EN.60950
R&TTE Directive 1995/5/EC	CTR.21

The conformity assessment procedure referred to in article 10 (3) and Annex II of Directive 1995/5/EC have been followed, with the involvement of the following notified body:

BABT product Services, 34, Molesey Road, Walton on Thames, Surrey, KT12 4RQ, UK.

Identification mark: 168

The technical documentation for this product is held at our Winkfield address.

Authorised Signature: Issued:

9th March 2001

J. A. Lamb, Managing Director

Castle Care•Tech Ltd
North Street Winkfield Berkshire SL4 4SY
+44(0)1344 886446 +44(0)1344 890024
sales@castle-caretech.com www.castle-caretech.com
Registered in England 2443937

A: Features

- Ademco and Scantronic fast-format compatible
- Extended Format reporting - SIA Format
- 4 Alarm Receiving Centre telephone numbers with individual URNs.
- 8 reporting channels, fully programmable
- Open/Close/Restore reporting programmable
- DTMF (multi-frequency) dialling
- V22/V22bis (2400bps) compatible modem, STU compatible.
- Line Fault monitor signalling directly to control panel
- CTR-21 approved for use throughout EU.

B: Safety and Installation

These instructions are designed to ensure that SAFETY regulations are correctly followed, as well as functional aspects. It is therefore essential that these be followed exactly.

In particular, the telephone cable MUST be routed and connected correctly.

C: The Euro-COM 9600 PCB

The Euro-COM PCB is designed to slot into a SIMM socket (P20) on any End Station from the Euro-MERiDIAN range, and can only be used in this way.

Attempts to use the device in any other host will invalidate the safety certification, could cause damage to the equipment and

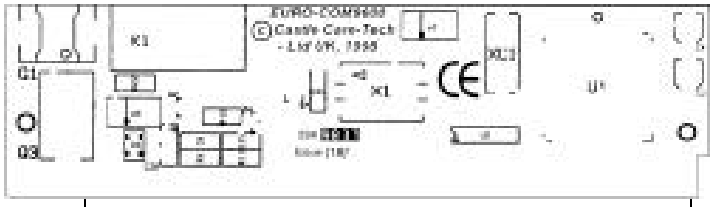

MAY BE HAZARDOUS.

The card MUST be installed and used as described in these installation instructions.

All connections to the End Station are made automatically. Terminals for connection to the PSTN are located on the End Station PCB.

When the unit is used on a shared line, the total REN loading of the line must NOT exceed 2.5. The REN value of any piece of equipment which is not marked should be assumed to be 1

The REN value of the Euro-COM 9600 is 1.

D: Fitting the Euro-COM 9600 to the End Station

Before slotting the Euro-COM PCB into the SIMM slot on the

End Station, ALL POWER MUST BE DISCONNECTED.

The card must be slotted into the correct socket (labelled P20) on the End Station. This is the UPPER socket on Euro-22/28, and RIGHT hand socket on Euro-44+. It is the only socket on Euro-10/12.

The 'notched' end must be to the LEFT (Euro-10/12/22/28) or TOP (Euro-44+), as follows:

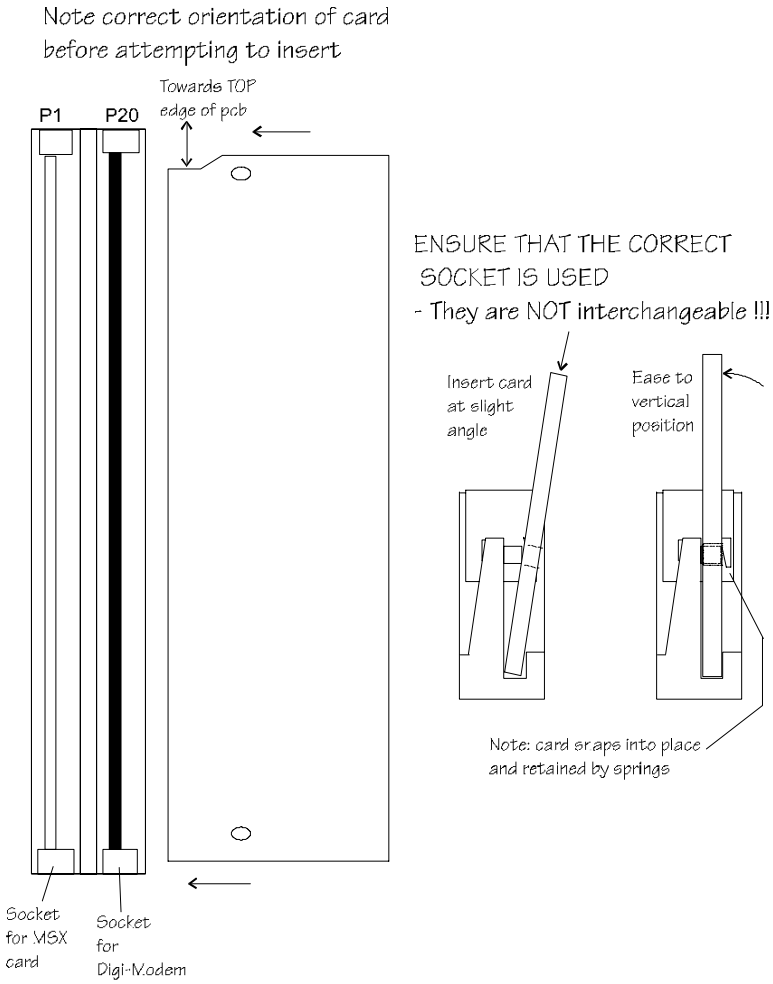

Should it be necessary to remove the unit, the reverse procedure should be performed, ensuring that all power is removed before doing so.

E: PSTN Wiring

Connections are made to terminals on the End Station PCB,

T A	Line 'A' in
T B	Line 'B' in
T C	Line 'A' out
T D	Line 'B' out
T E	Telecom Ground

Before making these connections, ALL POWER MUST BE DISCONNECTED from the system.

The Telecom Ground terminal (TE) should ALWAYS be connected to earth in order to maximise the effectiveness of the transient voltage protection on the unit.

Failure to do so will leave the device vulnerable to damage during electrical storms, etc.

Note that the approvals standard TBR21 clause 4.2 requires connection to be made via an RJ11 plug and socket.

The cable must be fed into the End Station housing through the hole provided, protected

by the grommet supplied, and secured in place with the cable-tie, thus:

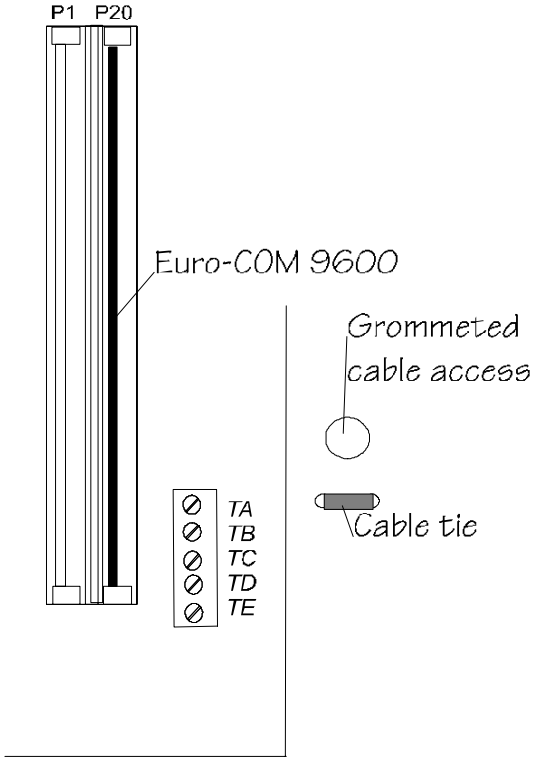

NOTE: The PCB layout varies between the Euro-MERiDIAN models, but labelling and connections are identical.

F: Programming the Unit

Programming of all telephone numbers, etc. should be carried out as described in Chapters 21, 22 and 23 of this manual.

G: Initialisation

To ensure correct initialisation, after installation, wait for the main system to initialise after powering up, then press the "RESET" button on the End Station for approx. 2 seconds.

If this is not done, a "MODEM FAULT" may be indicated.

WARNING

The Declaration of Conformity for this product for attachment to the PSTN is void if it is subject to any unauthorised modification, or if used with, or connected to:

Internal software which has not been approved.

External control software or control equipment which causes the unit to contravene the requirements of telecommunications standards.

THIS PAGE HAS BEEN LEFT BLANK FOR NOTES

Chapter 21

ARC Signalling with the Digi-Modem

This chapter explains how to set up Euro-MERiDIAN system to signal to an Alarm Receiving Centre.

PLANNING THE CALLS

Before starting to programme the system, take a little time to plan the pattern of calls required.

NOTE: Certain facilities may not be programmable on some models in the Euro-MERiDIAN range.

The system can communicate as follows:

Down-loading:	One PC	
ARC Signalling (Digicom):	Up to four numbers, each with individual account numbers and channel information	Combined Maximum four numbers.
SMS Text Messages:	Up to four numbers, each with individual message content selection	

Priority:

ARC and SMS signalling will ALWAYS take priority over communication with the PC.

Within the block of four numbers allocated to Digi and SMS calls, the priority is in numerical order. To prevent SMS taking priority, ensure that Digi calls are programmed as the first 'call numbers,' and as 'retry same' (NOT 'try next').

'Stop on Success' applies only to Digi-com calls.

SPECIAL NOTE:

When setting up, it is essential that ARC call numbers are correctly programmed, AND THAT THE FORMAT SELECTED MATCHES THE RECEIVER ALLOCATED TO THAT NUMBER.

If only one ARC number is programmed, "STOP ON SUCCESS" must be selected as 'YES' and "Dial Mode" as 'RETRY SAME.'

IF SET UP IS INCORRECT, SIGNALLING FAILURES MAY RESULT.

ARC SIGNALLING

Red Care Signalling

Note this requires a separate STU, which may be wired from or plugged onto the End Station.

A high degree of compatibility exists if the digi-modem shares a telephone line with the STU. However, in the light of warnings issued by RedCare and by STU manufacturers, Castle Care-Tech Ltd. cannot unconditionally guarantee this operation.

On most sites, problems will NOT be experienced – a trial on site, using the line involved, is recommended to verify this.

DIGICOM SECTION OF DIGIMODEM

Format selection.

Output allocation to the available channels.

Telephone and account number, plus reporting channels (x4)

Set/Unset and Restore channels

Digicom signalling always takes priority over PC signalling

SIGNALLING MODE

Fast Format signalling, 4 or 6 character ID, 8 or 16 channels.

SIA Level 1 and Telenot formats are also available.

PROGRAMMING PROCEDURE:

With the display showing

```
SET UP
DIGI/SMS?
```

Press YES

```
Program Digi/SMS
Calls?
```

Press YES

```
Disable Digi/SMS
Yes          [1]
```

Use D to select 'No [1]'

NOTE: This option permits calling to be disabled at any time (eg for testing) without cancelling any programmed settings.

Press YES

```
Program Digi/SMS
Call         [1]
```

Select identity of Digi call to be programmed (1 to 4)

Press YES

```
Active?
Yes          [1]
```

Use D to select 'No [0]' or 'Yes [1]'

Note additional option when programming Call numbers 2, 3 and 4 – see at ❋

Press YES

```
Choose Format [0]
Fast 4.8.1
```

Press Use number keys, or D to select signalling format.

0 = fast format 4.8.1
1 = fast format 6.8.1
2 = fast format 4.16.1
3 = fast format 6.16.1
4 = Telenot format
5 = SIA Level 1
6 = Contact ID
7 = SMS Message (see ch. 23)

NOTE: If an 'extended reporting' format is selected, see page 21-5

Press YES

```
Call No _ _ _ _ _
_ _ _ _ _ _ _ _ _ _ _ _ _
```

Use number keys to programme first telephone number for Alarm Receiving Centre (20 digits available)

Press YES

```
A/C No _ _ _ _ _ _
_ _ _ _ _ _ _ _ _ _ _ _ _
```

Use number keys to programme first account number for Alarm Receiving Centre (20 digits available)

Press YES

```
Channels 1-16
_ . . . . . . . . . . . . . . . .
```

Use D key to move cursor to required position, and press A to select the channel. The channel number, corresponding to the output type previously programmed, will appear (last digit only) in the appropriate position.

Press the A key again to remove the channel.

Press YES

```
Restore 1-16
_ . . . . . . . . . . . . . . . .
```

Use D key to move cursor to required position, and press A to select the channel. The channel number will appear (last digit only) in the appropriate position.

Press the A key again to remove the channel.

Press YES

```
Redials
          [03]
```

Use number keys, or D to select number of redials to attempt (0 to 15)

Press YES

```
Time Out
          [15]
```

Use number keys, or D to select time to wait for reply at each attempt to attempt (0 – 99 seconds)

Press YES

```
Stop on Success?
Yes        [1]
```

Use number keys, or D to select “No [0]” or “Yes [1].”

If NO is selected, the system will dial ALL digicom numbers, before moving on to ‘SMS Messaging.’

Press YES

```
Dial mode
Try Next [1]
```

Use D to select 0 = ‘retry same’ or 1 = ‘try next’ to select action required if dialling unsuccessful.

If selected as 'retry same' and number of redials reached, tries next number, etc.
When using SMS messaging, always select 'retry same.'
Press YES

```
Low Bat Report
No          [0]
```

Use D to select No [0] or Yes [1]

Press YES

```
AC Fail Report
No          [0]
```

Use D to select No [0] or Yes [1]
NOTE: This option is available in selected 'extended reporting' formats ONLY.

Press YES

```
Test Calls
No          [0]
```

Use number keys or D to select No [0] Timed [1] Periodic [2] or Sign of Life [3]. ('Sign of Life' mode functions as 'timed' but skips the test call if another call has been made within the programmed period.)

If 'periodic' is selected, programme test time each day, as follows; if 'timed' is selected, programme the interval between tests:

Press YES

```
Hours
            [00]
```

Use number keys, to select hours

Press YES

```
Minutes
            [00]
```

Use number keys, to select minutes

Press YES

```
Program DigiSMS
Call        [1]
```

Select identity of next Digi call to be programmed (1 to 4)

Note that additional options will be available, thus:
At point ❋

Press YES

```
Same as Call 1?
Yes         [1]
```

Use number keys, or D to select No [0] or Yes [1].
If 'YES' selected, jumps immediately to program next Call No., selecting same options as programmed for Call 1.

If 'NO' selected, select options required for call.

When finished,

Press NO

```
Program Digi/SMS
Call        [1]
```

Press NO

```
Program Digi/SMS
Calls?
```

Press NO

```
Program Digi
Channels?
```

Press YES

```
Digi 01 is[000]
Not Used
```

Use number keys, or D to select output type required for channel 1, from table on page 13-27, eg 001

```
Digi 01 is [001]
Fire
```

Press YES

Repeat for Digi channels 2 to 8 (or 16 if permitted by format)

Press NO to abort and move to

```
Program Digi
Channels?
```

Note: if options for 'Telenot' and 'Telenot restore' are shown, press NO – these are NOT applicable in the UK.

Press NO

```
Program SMS
Details?
```

Press NO

```
3 way calling
No          [0]
```

Use D or number keys to select 0 = 'No' or 1 = 'Yes'

This will apply to both Downloading and Digi signalling. ONLY AVAILABLE IF FACILITY IS ENABLED ON TELEPHONE LINE

Press YES

```
SET UP
DIGI/SMS?
```

Press NO to move to next menu.

If an "extended reporting" format was selected (see page 21-3), continue as follows:

```
Choose Format[0]
Fast 4.8.1
```

Use number keys, or D to select signalling format.

eg press number 5 or use D key so that display shows

```
Choose Format[5]
SIA level 1
```

Press YES

```
Call No _ _ _ _ _
_ _ _ _ _ _ _ _ _ _ _ _
```

Use number keys to programme first telephone number for Alarm Receiving Centre (20 digits available)

Press YES

```
A/C No _ _ _ _ _ _
_ _ _ _ _ _ _ _ _ _ _ _
```

Use number keys to programme first account number for Alarm Receiving Centre (20 digits available)

Press YES

```
Content 1-16
_.............
```

Use D key to move cursor to required position, and press A to select the content type(s) required to be signalled, or Use number keys **- see table on page 21-6**.

This number will appear (last digit only) in the appropriate position.

To remove the content type, press A key again.

Press YES

```
Content 17-32
_.............
```

Repeat the last operation to insert additional content types.

Press YES and continue from appropriate point on page 21-3.

CONTENT TYPES AVAILABLE.

The signalling requirements for "extended format" reporting may be selected from the following:

NOTE: These 'Content Types' are also used for SMS text messages, see chapter 23.

01	Set	All set events (by area/level)
02	Unset	All unset events (by area/level)
03	Special Unset	Unset events initiated by codes 15 to 20 only **(codes 11 to 12 on Euro-10 / 12)**
04	Set Fail	Attempt to set the system failed
05	Alarm	All alarm events (by area, level and type)
06	First alarm	First to alarm event (for each zone) only
07	Alarm Silenced	Any alarm/fault silenced (by area)
08	Confirmed	Sequentially confirmed alarm
09	LoTechFault	Mains Fail/Restore Telecom Line restore (STU or DigiModem)
10	HiTechFault	Low volts Battery fault/OK iD Line short Fuse failure RS-485 or Device Failure
11	Tech Info	System restart iD Twin Device Over current Logs cleared
12	Manager Info	Code Changed / deleted
13	Engineer Info	Engineer accessing system, and leaving
14	AccessC Alarm	Access Control door forced or left open
15	AccessC Info	Access Control tag at Reader
16	AccessC Ref	Access refused (invalid code)
17	SL SwitchOn	* Switcher zone active
18	SL SwitchOff	* Switcher zone restored
19	SL OtherOn	* Other zone active
20	SL OtherOff	* Other zone restored
21	Ward Set	Setting events for wards
22	Ward Unset	Unsetting events for wards
23	Ward Alarm	Alarm event in a ward

* - Signalled ONLY for zones with 'Special Logged' attribute.

Chapter 22

DOWNLOADING WITH Euro-MERiDIAN

This chapter outlines the features and benefits available from Downloading systems

All members of the Euro-MERiDIAN range include the ability to communicate with a 'host' personal computer at a remote location via a modem, or with a PC at site via RS-232 link. Almost any function available at the system keypads is available at the PC, and the alarm system may signal selected events to the PC.

Please refer to the BSIA Publication "Guidelines for Downloading Systems" for further recommendations.

This provides a range of benefits, both to the alarm company and to the user, including:

Alarm Company:

- Programming the system, and any adjustments, via the PC
- System problems reported to the PC as they occur.
- Remote interrogation of the system (including diagnostics) prior to reset after an alarm.
- Remote servicing of the system, and remote system interrogation in advance of on-site servicing.
- Remote access to logs to assist in investigation of alarms, etc.

The Customer

- Immediate response to need for changes
- Regular system verification for peace of mind
- Status interrogation for multiple sites
- Easy analysis of user irregularities.
- Analysis and indefinite storage of logs at PC.

Signalling to the PC

The system may be set up to duplicate the information signalled to the ARC. It may instead (or additionally) transmit a wide range of fault and diagnostic information to the PC.

The signal to the ARC will always take precedence over the signal to the PC.

Control from the PC

The PC provides full programming facilities for the system. Additionally, full test and diagnostic facilities for the system can be accessed. It is also possible to perform a 'download reset,' from the PC as well as set and unset the system (if it is in alarm condition, Guard Code Timer must have expired).

It is NOT now possible to download data to the system whilst it is set, though logs, diagnostics, etc. may be uploaded to the PC.

Signalling modes

A range of dialling modes may be used:

- Auto answer – permits the PC to dial in to the panel
- Dial back – permits the PC to dial the panel, which hangs up call and dials PC back to establish communication
- Panel dials – does not permit the PC to dial into the panel at all.

All modes permit the panel to dial the PC without restriction. At any time, the panel can be forced to dial the PC by keying in 5 5 5 5

Line Mode

- Dedicated Line – when PC dials panel, it will respond immediately.
- Shared Line - when PC dials panel, it will hang up after the second ring, and dial again. The first call primes the panel, which will then answer the second call.

PC at Site

It is possible to use a PC at site to perform exactly the same functions. In this case, the Digi-modem is not required; an RS-232 connection should be made to the RS-232 connector of an 'MSX Card' (or RS-232 interface card fitted into the MSX slot). The communications should then be set up to 'RS-232' instead of 'MODEM' (see page 22-3).

Note that in this mode, SMS text messages cannot be used.

PLANNING THE CALLS

Before starting to programme the system, take time to plan the pattern of calls required.

The system can communicate as follows:

Down-loading:	One PC	
ARC Signalling (Digicom):	Up to four numbers, each with individual account numbers and channel information	Combined Maximum four numbers.
SMS Text Messages:	Up to four numbers, each with individual message content selection	

Priority:

ARC and SMS signalling will ALWAYS take priority over communication with the PC.

Within the block of four numbers allocated to Digi and SMS calls, the priority is in numerical order. To prevent SMS taking priority, ensure that Digi calls are programmed as the first 'call numbers,' and as 'retry same' (NOT 'try next').

'Stop on Success' applies only to Digi-com calls.

NOTE: Whilst the COMM9600 has been designed with a high degree of compatibility with STUs, in view of the warnings issued by STU manufacturers, we cannot unconditionally guarantee correct operation when a line is shared. Trials, using the actual PSTN line, should always be carried out.

PROGRAMMING PROCEDURE:

NOTE: Certain facilities may not be programmable on some models in the Euro-MERiDIAN range.

With the display showing

```
SET UP
DOWNLOADING?
```

Press YES

```
Download by
None          [0]
```

Use D or number keys to select 1 = 'Modem' (or 2 = 'RS-232' for direct PC connection)

NOTE: "Modem" MUST be enabled if SMS Messaging is to be used.

Press YES

```
Security mode
Auto-Answer [0]
```

Use D or number keys to select 0 = 'Auto-Answer,' 1 = 'Panel Dials' or 2 = 'Dial-Back' (see page 22-2)

Press YES

```
Telecom Line
Dedicated     [0]
```

Use D or number keys to select 0 = 'Dedicated Line' 1 = 'Shared Line'

Press YES

```
Number of Rings
to Prime      [03]
```

Select number of rings (1 to 15) required to prime panel when used in 'shared' mode.

Press YES

```
Modem Speed
High          [1]
```

DO NOT CHANGE THIS SETTING UNLESS ADVISED BY TECHNICAL SUPPORT

Press YES

```
Program PCs
              [1]
```

Select identity of PC host to be programmed (1 to 4)

Press YES

```
Modem Tel No  _ _ _
_ _ _ _ _ _ _ _ _ _ _ _
```

Use number keys to programme host modem telephone number (up to 20 characters).

Press YES

```
Signal Alarms
No          [0]
```

Use number keys, or D to select No [0] or Yes [1]

Press YES

```
Signal Faults
No          [0]
```

Use D to select No [0] or Yes [1]

Press YES

```
Signal Set/Unset
No          [0]
```

Use D to select No [0] or Yes [1]

Press YES

```
Signal Access C.
No          [0]
```

Use D to select No [0] or Yes [1]
Option only for Euro-44+ and above.

Press YES

```
Program PCs
            [1]
```

Press NO

```
Password
 _ _ _ _ _ _ _ _ _ _ _ _
```

Programme password text, as described on page 13-3.

This must NOT be changed after the panel has initialised communication with the PC, or further communication will be impossible.

Press YES

```
Redials
            [03]
```

Use number keys or D to select number of redials to attempt (0 to 15)

Press YES

```
Time Out
            [15]
```

This option is NOT currently supported

Press YES

```
Stop on Success?
Yes         [1]
```

This option is NOT currently supported

Press YES

```
Dial mode
Retry same [0]
```

This option is NOT currently supported

Press YES

```
SET UP
DOWNLOADING?
```

Press NO to move to next menu item

NOTES:

The option to select '3-way calling' is located within the 'SET UP DIGI/SMS' menu.

Incoming 'ring cadence' recognition now follows a 'universal' protocol, so the previous "Country" selection is no longer required.

Version 3·1 software is NOT YET SUPPORTED by Euro-INSITE programme for Downloading.
A major upgrade to Euro-InSite to provide support is under development, & will be available shortly

Chapter 23

SMS Text Messages from Euro-MERiDIAN

This chapter explains the facility to transmit text messages to mobile 'phones.

Scope

Up to 32 different message groups may be programmed, for transmission to up to 4 different numbers. ALL message types within the selected group will be sent – this cannot be varied.

The message groups may be selected from the list below.

Planning the Calls

Before starting to programme the system, take a little time to plan the pattern of calls required.

NOTE: Certain facilities may not be programmable on some models in the Euro-MERiDIAN range.

The system can communicate as follows:

Down-loading:	One PC	
ARC Signalling (Digicom):	Up to four numbers, each with individual account numbers and channel information	Maximum four
SMS Text Messages:	Up to four numbers, each with individual message content selection	

NOTE: a total of four telephone numbers can be programmed – these can be any mix of ARC numbers and mobile phones (for SMS signalling).

Message Groups available:

CONTENT TYPE:

01	Set	All set events (by area/level)
02	Unset	All unset events (by area/level)
03	Special Unset	Unset events initiated by codes 15 to 20 only **(codes 11 to 12 on Euro-10 and 12).**
04	Set Fail	Attempt to set the system failed
05	Alarm	All alarm events (by area, level and type)
06	First alarm	First to alarm event (for each zone) only
07	Alarm Silenced	Any alarm/fault silenced (by area)
08	Confirmed	Sequentially confirmed alarm
09	LoTechFault	Mains Fail/Restore Telecom Line restore (STU or DigiModem)
10	HiTechFault	Low volts Battery fault/OK iD Line short Fuse failure RS-485 or Device Failure
11	Tech Info	System restart ID Twin Device Over current Logs cleared
12	Manager Info	Code Changed / deleted
13	Engineer Info	Engineer accessing system, and leaving
14	AccessC Alarm	Access Control door forced or left open
15	AccessC Info	Access Control tag at Reader
16	AccessC Ref	Access refused (invalid tag)
17	SL SwitchOn	* Switcher zone active
18	SL SwitchOff	* Switcher zone restored
19	SL OtherOn	* Other zone active
20	SL OtherOff	* Other zone restored
21	Ward Set	Setting events for wards
22	Ward Unset	Unsetting events for wards
23	Ward Alarm	Alarm event in a ward

* - Signalled ONLY for zones with 'Special Logged' attribute.

Initialisation

Before SMS signalling can be used, it must be initialised by communication with the Castle Host Computer (CHC). This is done through the 'Test CHC Communications' in Engineer Tests menu.

NOTE: To ensure traceability of SMS sites from the Castle CHC, you should keep a record of the 'software serial number' of each site – see page 13-4.

Testing

If live testing is conducted to a suitable telephone, please bear in mind that a delay in receipt is likely to be a function of the messaging service, rather than an alarm system fault.

The Engineer Test menu contains an option to 'Test CHC Communications' that initiates a call to the CHC.

The system will automatically carry out a test call to the CHC every two weeks. Castle Care-Tech will contact the alarm company in the event of this call not being received.

Summary of Steps to Set Up for SMS Text Message Transmission

1	In 'Setup Down-loading'	Select Communications as 'MODEM' – cannot be used in 'RS-232' mode (see page 22-3)
2	In 'Setup Digi/SMS'	Select content type(s). Program mobile number and Network (see page 23-4) Program Account Reference (see page 23-5)
3	In 'Test CHC Communi cations'	Initiate test call to CHC (see page 23-6)

PROGRAMMING PROCEDURE:

Within the 'SET UP DOWNLOADING' menu, ensure that 'MODEM' is enabled, as shown on page 8, and then scroll to:

```
SET UP
DIGI/SMS?
```

Press YES

```
Program Digi/SMS
Calls?
```

Press YES

```
Disable Digi/SMS
Yes          [1]
```

Use D to select 'No [1]'

NOTE: This option permits calling to be disabled at any time (eg for testing) without cancelling any programmed settings.

Press YES

```
Program Digi/SMS
Call         [1]
```

Select identity of call to be programmed (1 to 4)

BE CAREFUL NOT TO OVERWRITE ANY DIGI CALLS ALREADY PROGRAMMED.

Press YES

```
Active?
Yes          [1]
```

Use D to select 'No [0]' or 'Yes [1]'
Note additional option when programming Call numbers 2, 3 and 4 – see at ❋

Press YES

```
Choose Format[0]
Fast 4.8.1
```

Press Use number keys, or D to select signalling format:

07 = SMS Text Messages

```
Choose Format[7]
SMS Message
```

Press YES

```
Network[0]
Vodafone
```

Press Use number keys, or D to select network.

0 = Vodafone
1 = T Mobile
2 = Orange
3 = O2
4 = Virgin

eg Press 3

```
Network[3]
Cellnet
```

Press YES

```
Mobile No _ _ _ _ _
_ _ _ _ _ _ _ _ _ _ _ _ _
```

Use number keys to programme telephone number for first mobile phone (20 digits available)

Press YES

```
Content 1-16
_.............
```

NOTE: It is recommended that 'content types' be programmed AFTER the initial initialisation call to the CHC has been completed successfully.

Use D or B keys to move cursor to appropriate position, and press A to select Message Type(s) to be signalled to this number, (see list on page 23-2), eg 3 for type 3 (Special Unset) – the selected channel number will be displayed.

Press A again to remove the channel.

Press YES

```
Content 17-32
_.............
```

Repeat the above to select additional message types.

Press YES

```
Redials
        [03]
```

Use number keys, or D to select number of redials to attempt (0 to 15)

Press YES

```
Time Out
        [15]
```

Use number keys, or D to select time to wait for reply at each attempt to attempt (0 – 99 seconds)

Press YES

```
Stop on Success?
Yes        [1]
```

Use number keys, or D to select "No [0]"

Press YES

```
Dial mode
Try Next [1]
```

Use D to select 0 = 'retry same'

Press YES

```
Low Bat Report
No          [0]
```

Leave at default (No)

Press YES

```
AC Fail Report
No          [0]
```

Leave at default (No)

Press YES

```
Test Calls
No          [0]
```

Leave at default (No)

Press YES

```
Program Digi/SMS
Call        [1]
```

Select identity of next Digi call to be programmed (1 to 4)

Press YES

```
Active?
Yes         [1]
```

Use D to select No [0] or Yes [1]

Note that additional options will be available when programming Call numbers 2,3 and 4, see at ❋

Press YES

```
Same as Call 1?
Yes         [1]
```

Use number keys, or D to select No [0] or Yes [1].

If 'YES' selected, jumps immediately to program next Call No., selecting same options as programmed for Call 1.

If 'NO' selected, programme options required for call.

When finished programming calls:

```
Program Digi/SMS
Call        [1]
```

Press NO

```
Program Digi/SMS
Calls?
```

Press NO

```
Program Digi
Channels?
```

Press NO

```
Program SMS
Details?
```

Press YES

```
Account Ref.
_ _ _ _ _ _ _ _
```

Use letter and number keys to insert account reference advised by Castle Care-Tech Ltd.

Press YES

```
Manufacturer
Access [        ]
```

Press NO

```
Program SMS
Details?
```

Press NO

```
3 way calling
No          [0]
```

Leave as required by Digi / Downloading signalling.

Press YES

```
SET UP
DIGI/SMS?
```

Press NO to move to next menu item

Initialisation and Test Procedure

Before SMS messages can be sent to a mobile 'phone, it is necessary to gain authorisation for connection to the network, and set up the call routing through the appropriate bureau.

This is done, after programming the calls (as described above), but before programming 'content types' by scrolling to 'ENGINEER TESTS' and following these steps:

```
ENGINEER TESTS
```

Press YES and then scroll (with NO) to:

```
Test CHC
Communications?
```

Press YES

```
Testing to CHC
Please Wait
```

The panel communicates with the Castle Host Computer (CHC), which will initialise the system as required.

When this is complete the display will show EITHER

```
Test sent to CHC
Test Complete
```

The panel is now able to send SMS Text messages.

OR

```
Failed to dial
CHC
```

The test call has failed.

Check:

Telecom Line is OK

Downloading is correctly set up for 'MODEM'

Digi/SMS Programmed correctly

Call = Active

Mobile number is programmed correctly.

Press YES or NO to escape from menu.

When testing, bear in mind that a delay in receiving the message is likely to be due to the messaging service, rather than the Control.

Communication Failure:

In the event of failure to communicate with the CHC on a routine test call, the panel will display 'CHC Test Fail' until the test is next conducted successfully. This acts as a reminder that SMS signalling may not be operational, but will NOT interfere with normal system operation or SMS signalling (if operative).

To permit sites with CHC communication problems to be traced, a record should be maintained of the software serial number of each site (see 13-4).

Chapter 24

SYSTEM EXPANSION and ENHANCEMENT

This chapter highlights the means of providing additional and expanded facilities.

Expansion of the system is by means of 'MSX' Cards that slot into the End Station to provide enhanced specifications.

Current MSX134 and MSX256 cards are compatible with Euro-44+ systems, and with older 'Euro-MERiDIAN' systems fitted with software issues from 1.2 onwards (whether STD or MSX).

INSERTING THE MSX CARD

The MSX card must be slotted into the correct socket on the End Station, as shown.

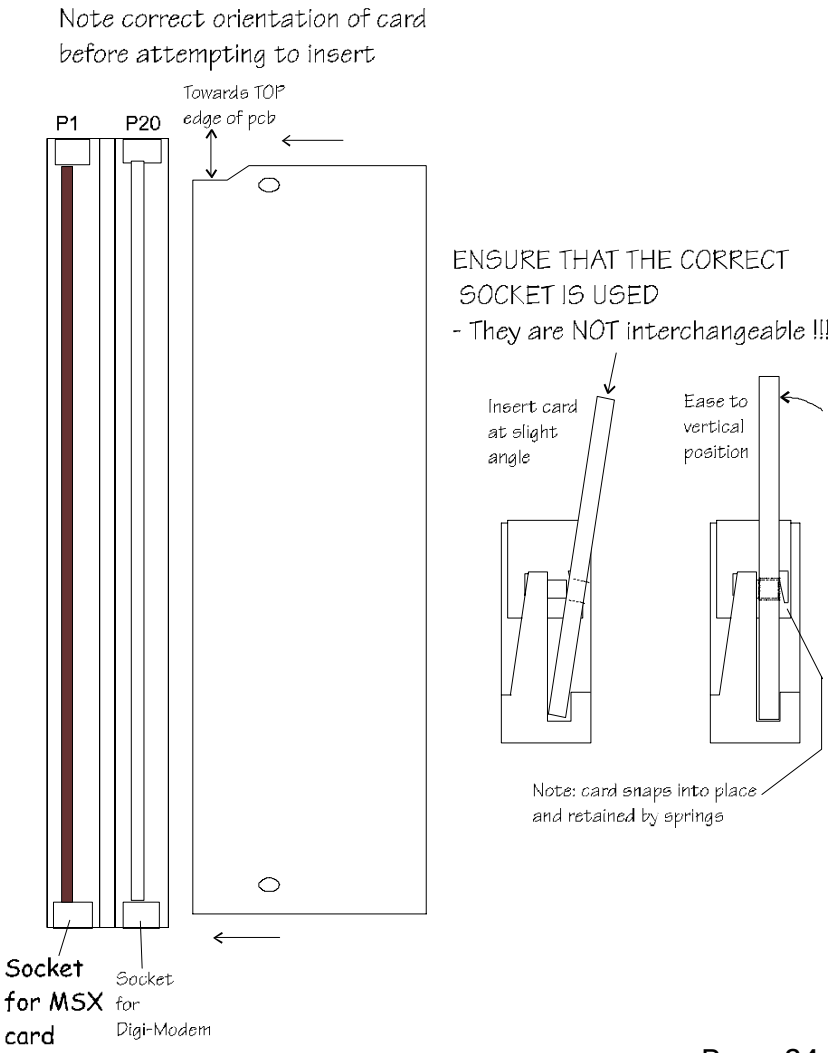

Cards Available:

MSX-134

This card expands the maximum capacity of the Euro-44+ to 134 zones, in 8 simultaneous areas.

The number of Control Points (ie Keypads, Tag Readers, Ward Controllers, Access Controllers and Guard Tour points) available is increased to 16 in any combination.

The areas are identified as 'A,B,C,D,0,1,2 and 3' and controlled from the appropriate keys on the keypad. The zones are located as in the table below:

Mode:	EoL	*iD*
iD zones		
End Station	1-30	1 – 30
ZEM 0	-	31-60
ZEM 1	-	61-90
ZEM 2	-	91-120
EoL zones		
ZEM 0	31-38	-
ZEM 1	39-46	-
ZEM 2	47-54	-
ZEM 3	55-62	-
ZEM 4	63-70	-
ZEM 5	71-78	-
ZEM 6	79-86	-
ZEM 7	87-94	-
ZEM 8	95-102	-
ZEM 9	103-110	-
ZEM 10	111-118	-
End Station	119-124	121-126
K'PAD 00	125-126	127-128
K'PAD 01	127-128	129-130
K'PAD 02	129-130	131-132
K'PAD 03	131-132	133-134
K'PAD 04	133-134	-

NOTES:

Keypad zones are ALWAYS End of Line. **Zones are NOT available on "Standard" Keypads.**

Zones 1 to 30 are ALWAYS iD.

Programming of these zones is as shown on pages 13-6 and following.

MSX-256

This card expands the maximum capacity of the Euro-44+ to 256 zones with 14 simultaneous areas.

The number of Control Points (ie Keypads, Tag Readers, Ward Controllers, Access Controllers and Guard Tour points) available is increased to 30. Of these up to 16 may be keypads, and up to 16 any combination of the other types. **Addresses 16 to 29 can ONLY be allocated to keypads.**

The areas are identified as 'A,B,C,D,0,1,2,3,4, 5,6,7,8 and 9' and controlled from the corresponding keys. The zones are located as follows:

Mode:	EoL	*iD*
iD zones		
End Station	1-30	1 – 30
ZEM 0	31-60	31-60
ZEM 1	61-90	61-90
ZEM 2	91-120	91-120
ZEM 3	-	121-150
ZEM 4	-	151-180
ZEM 5	-	181-210
ZEM 6	-	211-240
EoL zones		
ZEM 3	121-128	-
ZEM 4	129-136	-
ZEM 5	137-144	-
ZEM 6	145-152	-
ZEM 7	153-160	-
ZEM 8	161-168	-
ZEM 9	169-176	-
ZEM 10	177-184	-
ZEM 11	185-192	-
ZEM 12	193-200	-
ZEM 13	201-208	-
End Station	209-214	241-246
K'PAD 00	215-216	247-248
K'PAD 01	217-218	249-250
K'PAD 02	219-220	251-252
K'PAD 03	221-222	253-254
K'PAD 04	223-224	255-256
	etc.	

NOTES:

Zones 1 to 120 are **ALWAYS** iD.

Keypad Zones are always End of Line. These zones are additionally available at keypad address 04 (and higher on -256). **Zones are NOT available on "Standard" Keypads.**

Programming of these zones is as shown on page 13-6 and following.

'Non-Volatile Memory.'

The additional 24265 NVM provided must be inserted (correct polarity!) in the socket at 'U12' located near the top of the 'Euro-44+.'

PLEASE NOTE RS-485 RESTRICTIONS OUTLINED ON NEXT PAGE.

ADDITIONAL FACILITIES WITH MSX CARDS

RS-232 Connection

A connector is provided on the MSX Card to permit direct connection (with an appropriate loom) to the RS-232 Serial port of a PC running Euro-InSite software in order to provide full engineer access facilities, etc. from the PC.

Outputs

Up to 8 Output modules (with 16 outputs each) may be used on systems fitted with MSX Cards.

Output types

Type 035 'Follow Zone' is available only on systems with MSX134 or MSX256 Card fitted.

In addition to the simple 'follow' function, this output type can alternatively be programmed (individually) to be active for a specified time or to latch on until reset.

It is also possible to select the output to be active only when the relevant area (in which the zone is located) is 'set' or 'unset,' or to be active 'always.'

A further option permits an output to be programmed to follow an Area, a Shunt or a Ward, as alternatives to individual zones.

See chapter 25 for full details.

RS-485 Restrictions

Note that a standard RS-485 system has a maximum capacity of 30 devices. It is thus not possible to simultaneously connect the full number of devices that the Euro-256 is capable of handling.

It is recommended that a maximum of 8 keypads be used with the full number of 256 zones, or 128 zones only with 16 or more keypads.

Development is currently in progress to permit the use of additional RS-485 devices.

Chapter 25

CCTV or LIGHTING CONTROL WITH EURO-MERiDIAN

This chapter suggests further applications for the facilities of the Euro-MERiDIAN system.

Euro-MERiDIAN can be used to switch CCTV cameras, lighting, etc. using the wide range of output configurations, and output types available.

Outputs may be located at any convenient point by use of Output modules (or by use of outputs on Zone Expander units, Keypads and Set/Unset Tag Readers) as well as at End Station.

As well as outputs triggered by specific system functions, Euro-MERiDIAN may be programmed to switch outputs automatically by triggering detectors. This will NOT interfere with the normal system response to the zones, however programmed.

The 'SWITCHER' zone type is provided to switch outputs without initiating any other system function.

All Systems

A set of output types is available designated to 'Follow zone xx' (types 1001 on) – which will be live whenever the designated zone is in its active state, automatically restoring when the appropriate zone clears.

These output types may be programmed to any suitable output on the system.

Systems fitted MSX134 or MSX256 Cards

Alternatively, if the system is fitted with an MSX card, an additional output type (0035) is available providing the following functionality:

- FOLLOW (whilst zone active), TIMED or LATCHED output
- Follow individual ZONE, AREA, WARD or SHUNT LIST
- Follow WHEN SET, WHEN UNSET or ALWAYS

Programming the Outputs:

Select Output type 035 as described on page 13-2

```
Output xx      [035]
Follow Zone
```

Press YES

```
Follow Type
Follow         [0]
```

Use D or number keys to select type required:

0 = Follow
1 = Timed
2 = Latched

Press YES

IF 'TIMED' selected:

```
Output On For
               [000]
```

Select time (in seconds) output required to be live for.

Press YES

For ALL selections:

```
Follow What?
Zone           [0]
```

Use D or number keys to select type required:

0 = Zone
1 = Shunt List
2 = Ward
3 = Area

Press YES

```
Follow When?
When Set       [0]
```

Use D or number keys to select type required:

0 = When Set
1 = When Unset
2 = Always

Press YES

```
Zone to Follow
               [001]
```

OR 'Area to Follow' etc dependant upon selection made).

Use D or number keys to select zone (etc.) number required to follow

Press YES.

IF 'LATCHED' OPTION SELECTED ONLY

```
Reset by Zone
               [001]
```

Insert number of zone to be used for performing the reset.

This may be a suitably located switch, etc. wired as a zone, or any other zone on the system.

IN ALL CASES:

Option to programme next output.

Appendix A

FAULTFINDING Euro-MERiDIAN

This chapter provides assistance to identifying and eliminating possible problems with systems using Euro-MERiDIAN.

FIRST STEPS

There is no substitute for thorough familiarisation with the product, and manuals.

Before attempting to locate the source of a fault, ensure that you have correctly identified what the fault is:

1. Check the Keypad display (bear in mind that keypads may display different messages according to how they are programmed).

2. Check the logs.

These sources provide essential information that could be fundamental to understanding the true cause of the problem.

From that information, conclusions can be drawn that will enable fault-finding to commence, in line with the suggestions set out in this Appendix.

DEVICE CODES

Where appropriate, fault messages include a 3-figure device code to identify the individual item of equipment with problem, thus:

First digit identifies device type:

1 = End Station
2 = Keypad
3 = Tag Reader / Door Station / TMZ
4 = Zone Expander
5 = Output Module

Remaining digits identify individual address of failed item -

Device Failure 204 = RS-485 failure of Keypad address 04
Mains Fail 401 = Mains failure at PSU fitted to ZEM address 01

etc. . .

FAULT INDICATIONS

An extensive range of indications is provided. Please ascertain the true significance of each before commencing corrective action.

The following table defines each fault message displayed by Euro-MERiDIAN, and suggests appropriate initial actions. It does NOT cover all possible factors that may be relevant.

TELECOMS / SIGNALLING RELATED MESSAGES		
MODEM FAULT	End Station unable to communicate with COM9600 DigiModem	If modem not present, ensure that "Disable Digi" option is set to 'YES' and "DOWNLOAD MODE" is set to 'NONE' or 'RS232' If present, but not detected, check DigiModem is inserted correctly and complete initialisation by pressing End Station 'RESET' button for 2 seconds
DIGI FAIL COMM	Call to ARC from COM9600 Digimodem has failed. NOTE: This is a communication problem, which is rarely caused by an equipment fault.	Check ALL call details are programmed correctly. Ensure signalling format correctly set for ARC receiver. If only one call number programmed, ensure "STOP ON SUCCESS" = 'YES' and "TRY SAME" is selected - NOT "Try Next."
CHC TEST FAIL	Unable to communicate with Castle Host Computer **NOTE: This would also result if 'phone line had premium rate calls blocked**!	Ensure Digi is enabled, and at least one SMS call is correctly programmed. Check that ordinary phone on same line connects to CHC and modem tones heard - if not, problem is PSTN - NOT equipment. De-programme SMS Content types for each call, exit Engineer menu, press RESTART button, and retry CHC test from Manager menu.
LINE FAULT 100	PSTN Line Fault signalled by COMM9600 DigiModem	Only operative if "DOWNLOAD BY MODEM" selected OR "DISABLE DIGI/SMS" is set to 'NO' NOTE: 'Line Fault' timer operative
STU LINE FAULT	PSTN Line Fault signalled by device using 'STU' pins on End Station	Only operative if Site Option "DIGI-REPLY" is set to 'STU' or 'Digicom.' Check voltage on input pin (15 on Euro-44+; 1 [brown] on Euro-22/28) -if +5/12 volts, device connected is showing fault. NOTE: 'Line Fault' timer operative
STU FAIL COMM	Call to ARC from device using End station STU pins has failed. NOTE: This is a communication problem, which is rarely caused by an equipment fault.	Only operative if Site Option "DIGI-REPLY" is set to 'Digicom.' Check voltage on input pin (7 on Euro-44+; 2 [red] on Euro-22/28) -if +5/12 volts, device connected is showing fault.

SYSTEM COMMUNICATIONS (RS-485) AND KEYPAD PROBLEMS		
DEVICE FAIL xxx	Device on RS-485 communications bus failing to communicate	Identify device from numeric code. Check device addressed correctly to match programming. Check connections at device, and cabling to it. If above correct, re-boot device, followed by re-boot End Station
485/COMMS LOST	Displayed on Keypad that has not yet established communications with End Station	Part of routine initialisation procedure. If persists, check display at other keypad(s) to confirm if device failure at that keypad or complete system RS-485 failure (temporarily attach additional keypad direct to End Station if necessary).
Keypad display is BLANK	Keypad address does not match any keypad enabled	Check keypad address, noting that a keypad at address 00 must be present to programme system. Also check "Assigning Keypads" menu in Engineer mode set up correctly.
Keypad display normal, but KEYS LOCKED OUT	More than one device connected at the same address	Correct addressing so that no overlaps. Then power system down and up again to correctly re-initialise.

DETECTION FAULTS		
iD LINE SHORT	Fault on iD line	Line may be shorted to itself, or to a supply connection. Check also for shorts to EARTH
SAB TAMPER	Tamper fault detected on connection from SAB	Terminal B3 should be at or near 0v. If not, is SAB Tamper switch closed? Check Fuse F6 intact, and connections to SAB.
CASE TAMPER	Case tamper switch open	Secure switch closed
SIREN x TAMPER	Monitors for German specification fault conditions on relay plug-on	Euro-44+ and above. For UK use, Site Option "DIGI-REPLY" should NOT be set to 'Relay monitor'
STROBE TAMPER		

POWER SUPPLY, etc.		
BATTERY FAULT xxx	Battery Fuse (F4) failed, OR Battery not present, OR Battery volts low	Note: This indication should be expected during recharge after a mains failure.
BAT LOAD FAIL	Battery Load Test has failed	Only displays if option selected. Battery uncharged or capacity below specification, may need replacing.
BATTERY CRITICAL	Battery being disconnected	Protects battery from deep-discharge damage during extended mains failure. NOTE: System is now powered down!
MAINS FAIL xxx	Mains supply failed	System detects mains frequency out of specification, as well as voltage. NOTE: 'AC FAIL' timer operative.
FUSE x FAULT	Fuse identified failed, OR Output protected by fuse drawing excessive current	x identifies fuse affected: Fuse 1 = +12v at terminals H Fuse 2 = +12v at terminals D Fuse 3 = +12v at terminals E Fuse 4 = BATTERY 0v Fuse 5 = +12v at terminals C Note: Fuse 6 failure will cause SAB Tamper fault.
LOW VOLTS xxx	Power supply volts low	Battery volts below normal 'battery fault' level during mains failure

INDICATIONS ASSOCIATED WITH ENGINEER MENU		
Engineer Access Denied	Access to Engineer menu NOT possible, as system is not fully unset.	Ensure that ALL areas are unset, using suitable USER codes / Tags at appropriate keypads / readers.
Check Failed Zone xxxx	Zone in fault on attempting to exit engineering	Applies to 24-hour tamper, or other zone types that would generate an alarm condition if the system were returned to 'day' mode. Also applies to tamper fault on other zone types. Check for fault on zone, or isolate in programming.
Error zone areas not accessible	A zone has been programmed to an area for which no setting point is valid to unset	It would therefore be impossible to fully unset the system after a tamper alarm on that zone. Programming must be adjusted before exit engineering.
Error some areas cannot be unset	Setting points have been programmed such that it is possible to set an area, but not unset it.	Programming must be adjusted before exit engineering.

THIS PAGE LEFT BLANK FOR NOTES

Castle Care-Tech Ltd. welcome suggestions for expanding this appendix, or providing additional information.

Appendix B

PRINCIPAL CHANGES to Euro-MERiDIAN

This chapter summarises the principal changes that have been implemented in the Euro-MERiDIAN system.

NOTE: This manual includes information relevant to CURRENT software issues (as identified on front cover) only. For details relevant to earlier issues, please refer to corresponding manuals, which may be downloaded from Castle Care-Tech web site.

Function	Summary of change

Euro-MERiDIAN Issue 1.0 STD and 1.0MSX - Release issue April 1999

Issue 1.1 - June 1999

Siren Test	Includes strobe
Diagnostics	Current readings available
	iD Slow Scan implemented
Outputs	Additional "French Siren" configuration
Downloading	RS232 PC Link available

Issue 1.2 - September 1999

Expansion	Introduced compatibility with MSX134 / 256 cards when introduced.

Issue 2.0 - June 2000

Range revised, Original Euro-MERiDIAN now designated Euro-44 + ; new Euro-22 and Euro-28 models. Also MSX-134 card to upgrade Euro-44.	
Level Setting	Standard on Euro-22 / 28; option on Euro-44
Intelligent Set	Revised for level setting
Exit modes	New "Door / Timed mode
Duress Code	Now signals only when used to UNSET
Shunts	New 'Shunt' zone type and associated menu
Timers	New 'Fire' timer
Outputs	Completely revised table, many new configurations
Logs	New 'digi triggered' entry
	Special log zone attribute available

Function	Summary of change

Issue 2.03 - July 2000

Downloading	Accepts 'Unset' whilst in alarm, after 'guard code' timer expired.

Issue 2.05 - April 2001

Time display	Updates every minute only (to accelerate communications in larger systems)
Confirmation	2nd alarm NOT triggered if entry route used during 1st alarm.

Issue 2.06 - September 2001

Mains Fail Time	New setting, 250 = endless
Confirmation	Response from entry route changed in anticipation of DD243
	If FX zone omitted at rearm, ER defaults as if FX

Issue 2.071 - October 2001

Euro-256	Released on extended field trial with RS485 restrictions

Issue 2.08 - April 2002

Confirmation	Operation on entry route revert to 2.05 specification
Ring cadence	'Universal' ring cadence recognition for incoming calls from PC when Downloading in use.

Issue 3.00 - June 2002

Euro-12	New product in range
Confirmation	Full compliance with DD243:2002 -
	New Keyswitch, Unset zone types for confirmation scenarios
	New Confirm Timer
	New Entry Shock zone type and Confirm Group zone attribute
	New options for DD243:2002 requirements and options
Engineer Force Set	Now accepts 2 zones for testing confirmed alarms
Keyswitch operation	Enhanced with new 'Keyswitch' zone type
Set Points	Euro-10/12/22/28 can allocate set point to set an individual level.
Volume levels	Level one now silent with audible 'chime' at end of exit time.
Engineer Menu	Can be transferred between Keypads
Soak Test	New menu, now located in Engineer Tests
Downloading	Download when set not now possible.

Function	Summary of change

Issue 3·1 – September 2002

Master Manager Code	No longer Sets/Unsets the system.	Page 5-7,8
FLEXI-SET	Now operative at SETTING only.	Page 5-2
EoL Wiring	Accepts up to three detectors per circuit.	Page 11-4
Invert STU Outputs	New: Option to invert outputs for “Positive Removed” triggering.	Page 13-36
Prevent PIN codes	New: Option to prevent PIN Codes being programmed from Manager Menu.	Page 13-36

This Page has been left Blank for Notes

Castle Care-Tech Ltd.
INSTRUCT 62
Issue 3.1 Sept 2002

Castle Care-Tech Ltd.
North Street, Winkfield, Windsor, Berkshire, SL4 4SY
t Sales: 01344 887788 Technical Support: 01344 886767
f 01344 890024 **e** sales@castle-caretech.com